sprecher+schuh

Motor Circuit Controllers + Circuit Breakers

Series KT7 Motor Circuit Controllers

General Description F2
Series KTA7 *Base Units* F4
Series KTC7 *Base Units* F6
Series KTB7 *Base Units* F8
Series KTV7 *Base Units* F9.1
Accessories F10
Technical Information - KT7 ..... F20
Dimensions - KT7 ..... F33

Series KTU7 UL489 Molded Case Circuit Breakers

Series KTU7 MCCB F47
Accessories F49
Technical Information F51
Dimensions & Wiring Diagrams F55

Ecombo and EcomboPlus Starters

General Description F58
CL8 / CLU8 *Ecombo Starters* F60
CL7 / CLU7 *Ecombo Starters* F62
CK7 / CKU7 *EcomboPlus Starters* F66
CLT7 / CLUT7 *Three Component ECombo Starters* F70
KT7 Assembly - *Application Rating Charts* F73
Wiring Diagrams F76
Dimensions F78

Enclosed Motor Controllers & Circuit Breakers

KT7 Type-E Manual Combination Controller F87
Explosion-proof KT7 Motor Controllers F91
KTU7 Molded Case Circuit Breakers F93
CX7 Ecombo Kwikstarters F96
CX7 Combination Controllers F103
CX7 Explosion-proof Controllers F108
CX7 Type E/F Simplex & Duplex Pump Controllers F109
Custom Multi-Starter Control Panels F112
Technical Information F114
Wiring Diagrams F116
Enclosure Dimensions F119

Methods of Applying KT7 Motor Circuit Controllers & MCCBs F121

KT4 Manual Motor Starters

General Description F131
Accessories F133
Technical Information F137

Series KT7 Motor Circuit Controllers

Versatile, convenient and space saving… for a variety of applications

Sprecher+Schuh's KT7 series of Motor Circuit Controllers are some of the most versatile and technologically advanced control products available today.

In one small package, KT7s combine the functions of:

- Current limiting short circuit protection
- Class 10 thermal overload protection
- Switching and
- Signaling

These devices can be used in a variety of control schemes that reduce panel space, simplify installation and eliminate the need for more expensive equipment.

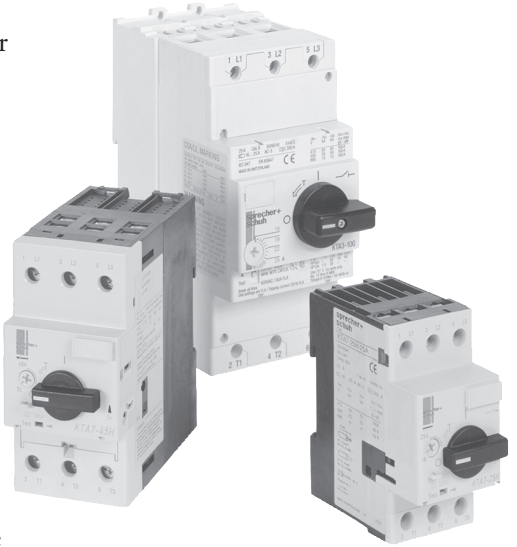

Increased ratings…

Sprecher+Schuh's KT7 controller family offers higher interrupting capacities (KAIC ratings) and improved Type 2 Coordination and Type E (life after short-circuit). The KTA7-25H/32H offers the option of higher short-circuit current ratings (SCCR) than the standard interrupting capacity of the KTA7-25S/32S Motor Controllers. KTA7 is also available in frames up to 45A. KTC7 can be used with High Efficiency motors. KTB7 Magnetic Only controllers can be combined with CA7 contactors and CEP7 overloads to provide additional features. KTV7 series motor controllers are suitable for application at the output of variable frequency drives (VFD) installations.

Designed for multiple applications

UL rules allow KT7 Motor Circuit Controllers to be used in a wide variety of applications including:

- Manual Starter Applications
- Traditional Group Motor Applications with compliance to the new Tap Conductor Ratings
- Motor Disconnect Applications
- Self-Protected Manual Combination Starter Applications (Type E)
- Individual Combination Starter Applications (Type E/F)
- Multi-motor Starter Combination Applications (Type E/F)

See page F121 for
Methods of Applying KT7 Motor Circuit Controllers

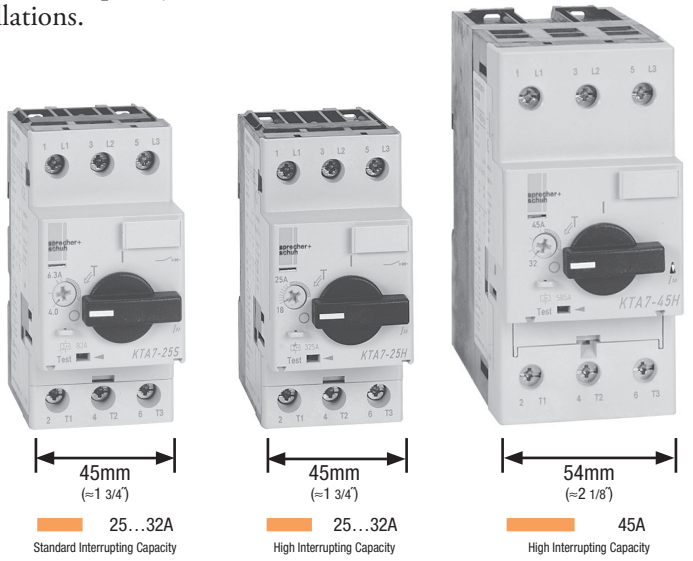

Construction Type E Listing

Improved current limiting and breaking capacity has allowed KT7s to be UL / CSA listed as self-protected (Construction Type E) manual combination motor controllers. This eliminates the need for an upstream fuse or circuit breaker when using the KT7 as a manual motor starter. In addition, KT7s *also* meet UL requirements for "at-motor disconnects," which means they can be used in an enclosure with a lockable handle as a manual motor starter for individual circuits, and are also an approved means of motor disconnect.

KT7s meet UL requirements for Type E manual motor controllers and "at-motor disconnects"

Type E + Combo starter + Economy = "Ecombo" starter

When the KT7 self-protected manual combination starter is combined with Sprecher + Schuh's CA7 contactor to provide remote operation, we now have an alternative to the classic combination starter. We call these "Ecombo" starters, which save significant dollars and panel space over conventional combo starters. Ecombo starters are available for applications up to 45 Amperes.

See a complete explanation of Ecombo starters beginning on page F58 of this catalog.

Multi-motor applications… Popular and money saving

Because of the KT7's Construction Type E – UL Rating as a self-protected combination starter, many group motor installations can utilize an even simpler design and less expensive equipment. The result is minimum panel size and maximum flexibility while avoiding cumbersome NEC group motor installation rules.

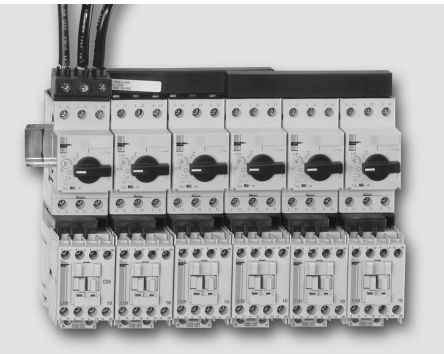

Using KT7s in Multi-Motor Starter applications can replace classic Branch Circuit Protection Devices and reduce panel space up to 60%

Excellent short circuit protection characteristics

In the event of a short-circuit, the contacts are opened by magnetic, non-adjusting tripping elements in times approaching 2/1000 of a second. This results in the extremely rapid buildup of an arc voltage which limits the current of the short-circuit to a very low level. Because of this superb current limiting capability, KTA Motor Circuit Controllers have a short circuit capacity of up to 65kA at 480Y/277V and up to 47kA at 600Y/347V (see illustration below).

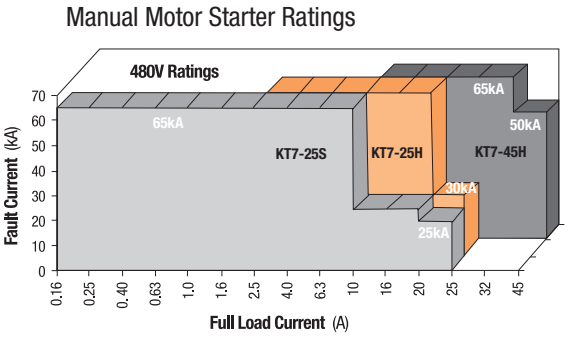

Superb thermal overload protection

Every KT7 device is individually calibrated at the factory for the smallest and largest current it can handle. When coupled with automatic ambient temperature compensation over a range of -25°C to +60°C, very accurate thermal overload protection is obtained. In addition, the KT7 is a Class 10 device… it trips within 10 seconds under locked rotor conditions (6 x FLA). This better protects today's T-Frame motors.

Special units for special applications

KTC7 controllers are available with a fixed magnetic trip set at 16…20x the maximum value of the current adjustment range (as opposed to 13x for the KTA7). This prevents nuisance tripping in applications utilizing high efficiency motors for example. The KTB7 Magnetic Only model is available *without* the thermal trip feature for special applications where a separate motor overload is required.

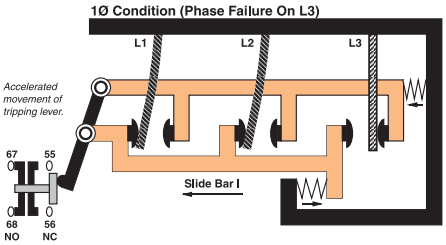

All KT7 Motor Circuit Controllers offer accelerated tripping under single phase conditions

Other protection features

All KT7 Motor Circuit Controllers provide accelerated tripping under single phase conditions. This is accomplished with a special "differential tripping" mechanism built into each device.

KTA7 Base Unit

Maximum Horsepower						Current Adjustment Range [A]	Magnetic Release Response Current [A]	Catalog Number	Price
Typical Single Phase		Typical Three Phase [HP]							
115V	230V	200V	230V	460V	575V				
KTA7-25…32S — Standard Interrupting Capacity									
~	~	~	~	~	~	0.10...0.16	2.1	**KTA7-25S-0.16A**	**218**
~	~	~	~	~	~	0.16...0.25	3.3	**KTA7-25S-0.25A**	**218**
~	~	~	~	~	~	0.25...0.40	5.2	**KTA7-25S-0.4A**	**218**
~	~	~	~	~	~	0.40...0.63	8.2	**KTA7-25S-0.63A**	**249**
~	~	~	~	~	1/2	0.63...1.0	13	**KTA7-25S-1.0A**	**249**
~	1/10	~	~	1/2	3/4	1.0...1.6	21	**KTA7-25S-1.6A**	**249**
1/10	1/6	1/2	1/2	1	1-1/2	1.6...2.5	33	**KTA7-25S-2.5A**	**249**
1/8	1/3	3/4	3/4	2	3	2.5...4	52	**KTA7-25S-4.0A**	**249**
1/4	1/2	1	1-1/2	3	5	4...6.3	82	**KTA7-25S-6.3A**	**249**
1/2	1-1/2	2	3	5	7-1/2	6.3...10	130	**KTA7-25S-10A**	**249**
1	2	3	5	10	10	10...16	208	**KTA7-25S-16A**	**284**
1-1/2	3	5	5	10	15	14.5...20	260	**KTA7-25S-20A**	**284**
2	3	7-1/2	7-1/2	15	20	18...25	325	**KTA7-25S-25A**	**284**
2	5	7-1/2	10	20	25	24...29	406	**KTA7-32S-29A**	**394**
2	5	7-1/2	10	25	30	27...32	448	**KTA7-32S-32A**	**394**
KTA7-25…32H — High Interrupting Capacity									
1/10	1/6	1/2	1/2	1	1-1/2	1.6...2.5	33	**KTA7-25H-2.5A**	**312**
1/8	1/3	3/4	3/4	2	3	2.5...4	52	**KTA7-25H-4.0A**	**312**
1/4	1/2	1	1-1/2	3	5	4...6.3	82	**KTA7-25H-6.3A**	**312**
1/2	1-1/2	2	3	5	7-1/2	6.3...10	130	**KTA7-25H-10A**	**312**
1	2	3	5	10	10	10...16	208	**KTA7-25H-16A**	**355**
1-1/2	3	5	5	10	15	14.5...20	260	**KTA7-25H-20A**	**355**
2	3	7-1/2	7-1/2	15	20	18...25	325	**KTA7-25H-25A**	**355**
2	5	7-1/2	10	20	25	24...29	406	**KTA7-32H-29A**	**497**
2	5	7-1/2	10	25	30	27...32	448	**KTA7-32H-32A**	**497**
KTA7-45H — High Interrupting Capacity									
1/2	1-1/2	2	3	5	7-1/2	6.3...10	130	**KTA7-45H-10A**	**510**
1	2	3	5	10	10	10...16	208	**KTA7-45H-16A**	**510**
1-1/2	3	5	5	10	15	14.5...20	260	**KTA7-45H-20A**	**510**
2	3	7-1/2	7-1/2	15	20	18...25	325	**KTA7-45H-25A**	**510**
2	5	7-1/2	10	20	30	23...32	416	**KTA7-45H-32A**	**573**
3	7-1/2	10	15	30	40	32...45	585	**KTA7-45H-45A**	**573**

Catalog Number KTA7-25S

Catalog Number KTA7-25H

Catalog Number KTA7-45H

Horsepower ratings shown in the table are for reference only.
The final selection of the manual starter depends on the actual motor full load current and service factor.

- *For motor with service factor less than 1.15.* Use motor nameplate full load current times 0.9 and choose the motor starter with the appropriate current range.
  Example: Motor F.L.C. = 4.2A; S.F. = 1.0. – 4.2A x 0.9 = 3.78A.
  Select Catalog Number KTA7-25S-4.0A.

KTA7 UL Ratings Application Chart

Device	Manual Motor Starter		Manual Controller for Group Installation ❶			Manual Controller as Motor Disconnect ❷❺		Suitable for Tap Conductor Protection		Self-Protected Type E Manual Combination Controller ❸❹❺	
	Max. Short Circuit Current [kA]		Max. Fuse or Circuit Breaker	Max. Short Circuit Current [kA]		Max. Short Circuit Current [kA]		Max. Short Circuit Current [kA]		Max. Short Circuit Current [kA]	
	480V	600V		480V	600V	480V	600V	480Y/277V	600Y/347V	480Y/277V	600Y/347V
KTA7-25…32S — Standard Interrupting Capacity											
KTA7-25S-0.16A	65	47	450	65	47	65	47	65	47	65	47
KTA7-25S-0.25A	65	47	450	65	47	65	47	65	47	65	47
KTA7-25S-0.4A	65	47	450	65	47	65	47	65	47	65	47
KTA7-25S-0.63A	65	47	450	65	47	65	47	65	47	65	47
KTA7-25S-1.0A	65	47	450	65	47	65	47	65	47	65	47
KTA7-25S-1.6A	65	47	450	65	47	65	47	65	47	65	47
KTA7-25S-2.5A	65	30	450	65	30	65	30	65	30	65	30
KTA7-25S-4.0A	65	25	450	65	25	65	25	65	25	65	25
KTA7-25S-6.3A	65	30	450	65	30	65	30	65	~	65	~
KTA7-25S-10A	65	30	450	65	30	65	30	65	~	65	~
KTA7-25S-16A	30	30	450	30	30	30	30	30	~	30	~
KTA7-25S-20A	30	30	450	30	30	10	10	10	~	10	~
KTA7-25S-25A	25	10	450	25	10	10	5	~	~	~	~
KTA7-32S-29A	25	5	450	25	30	10	~	~	~	~	~
KTA7-32S-32A	25	5	450	25	30	10	~	~	~	~	~
KTA7-25…32H — High Interrupting Capacity											
KTA7-25H-2.5A	65	30	450	65	30	65	30	65	30	65	30
KTA7-25H-4.0A	65	30	450	65	30	65	30	65	30	65	30
KTA7-25H-6.3A	65	30	450	65	30	65	30	65	30	65	30
KTA7-25H-10A	65	30	450	65	30	65	30	65	30	65	30
KTA7-25H-16A	65	30	450	65	30	65	30	65	30	65	30
KTA7-25H-20A	65	30	450	65	30	65	30	65	~	65	~
KTA7-25H-25A	30	30	450	30	30	30	30	30	~	30	~
KTA7-32H-29A	30	30	450	30	30	30	18	~	~	~	~
KTA7-32H-32A	30	30	450	30	30	30	18	~	~	~	~
KTA7-45H — High Interrupting Capacity											
KTA7-45H-10A	65	30	600	65	30	65	30	65	30	65	30
KTA7-45H-16A	65	30	600	65	30	65	30	65	30	65	30
KTA7-45H-20A	65	30	600	65	30	65	30	65	30	65	30
KTA7-45H-25A	65	30	600	65	30	65	30	65	30	65	30
KTA7-45H-32A	65	30	600	65	30	65	30	65	30	65	30
KTA7-45H-45A	65	18	600	65	18	65	18	65	~	65	~

❶ UL 508, CSA 22.2 No. 14 for group installation, in connection with short-circuit protection device.
❷ UL 508 Part III.
❸ UL 508 Part IV.
❹ Type E applications require use of the KT7-xx-TE terminal adaptor on KT7s. Alternatively, compact busbar supply block KT7-_-A2E or -A3E meet Type E requirements for terminal spacing.
❺ Requires lockable twist knob (KT7-KN1 or KT7-KRY1 page F16) or lockable door coupling handle (KT7-HTN or KT7-HTRY page F15).

It should be noted that the KT7 Manual Motor Circuit Controller, when listed as a self-protected (Type E) device, is rated for Wye-connected power systems for voltages above 240 volts (i.e. 480Y/277 volts common in the United States or 600Y/347 volts common in Canada).

KTC7 Base Unit

Maximum Horsepower						Current Adjustment Range [A]	Magnetic Release Response Current [A]	Catalog Number	Price
Typical Single Phase		Typical Three Phase [HP]							
115V	230V	200V	230V	460V	575V				
KTC7-25S — Standard Interrupting Capacity									
~	~	~	~	~	~	0.10...0.16	3.2	**KTC7-25S-0.16A**	**218**
~	~	~	~	~	~	0.16...0.25	5.2	**KTC7-25S-0.25A**	**218**
~	~	~	~	~	~	0.25...0.40	8.2	**KTC7-25S-0.4A**	**218**
~	~	~	~	~	~	0.40...0.63	13	**KTC7-25S-0.63A**	**249**
~	~	~	~	~	1/2	0.63...1.0	21	**KTC7-25S-1.0A**	**249**
~	1/10	~	~	1/2	3/4	1.0...1.6	32	**KTC7-25S-1.6A**	**249**
1/10	1/6	1/2	1/2	1	1-1/2	1.6...2.5	52	**KTC7-25S-2.5A**	**249**
1/8	1/3	3/4	3/4	2	3	2.5...4	82	**KTC7-25S-4.0A**	**249**
1/4	1/2	1	1-1/2	3	5	4...6.3	130	**KTC7-25S-6.3A**	**249**
1/2	1-1/2	2	3	5	7-1/2	6.3...10	208	**KTC7-25S-10A**	**249**
1	2	3	5	10	10	10...16	260	**KTC7-25S-16A**	**284**
KTC7-25H — High Interrupting Capacity									
1	2	3	5	10	10	10...16	260	**KTC7-25H-16A**	**355**
1-1/2	3	5	5	10	15	14.5...20	325	**KTC7-25H-20A**	**355**
KTC7-45H — High Interrupting Capacity									
2	5	7-1/2	7-1/2	15	20	18...25	416	**KTC7-45H-25A**	**510**
2	5	10	10	20	30	23...32	585	**KTC7-45H-32A**	**573**

Horsepower ratings shown in the table are for reference only.
The final selection of the manual starter depends on the actual motor full load current and service factor.

- *For motor with service factor less than 1.15.* Use motor nameplate full load current times 0.9 and choose the motor starter with the appropriate current range. Example: Motor F.L.C. = 4.2A; S.F. = 1.0. – 4.2A x 0.9 = 3.78A. Select Catalog Number KTA7-25S-4.0A.

KTC7-25S

Description

The KTC7 has a fixed magnetic trip set at 16…20x the maximum value of the current adjustment range (as opposed to the KTA7s magnetic trip of approximately 13x current adjustment range). KTC7 are typically used in applications where nuisance tripping might occur, as with some high efficiency motors.

❶ Magnetic trip is fixed at 16…20x the maximum value of the current adjustment range.

KTC7 UL Ratings Application Chart

Device	Manual Motor Starter		Manual Controller for Group Installation ❶			Manual Controller as Motor Disconnect ❷❺		Suitable for Tap Conductor Protection		Self-Protected Type E Manual Combination Controller ❸❹❺	
	Max. Short Circuit Current [kA]		Max. Fuse or Circuit Breaker	Max. Short Circuit Current [kA]		Max. Short Circuit Current [kA]		Max. Short Circuit Current [kA]		Max. Short Circuit Current [kA]	
	480V	600V		480V	600V	480V	600V	480Y/277V	600Y/347V	480Y/277V	600Y/347V
KTC7-25S — Standard Interrupting Capacity											
KTC7-25S-0.16A	65	47	450	65	47	65	47	65	47	65	47
KTC7-25S-0.25A	65	47	450	65	47	65	47	65	47	65	47
KTC7-25S-0.4A	65	47	450	65	47	65	47	65	47	65	47
KTC7-25S-0.63A	65	47	450	65	47	65	47	65	47	65	47
KTC7-25S-1.0A	65	47	450	65	47	65	47	65	47	65	47
KTC7-25S-1.6A	65	47	450	65	47	65	47	65	30	65	30
KTC7-25S-2.5A	65	25	450	65	25	65	25	65	25	65	25
KTC7-25S-4.0A	65	30	450	65	30	65	30	65	~	65	~
KTC7-25S-6.3A	65	30	450	65	30	65	30	65	~	65	~
KTC7-25S-10A	30	30	450	30	30	30	30	30	~	30	~
KTC7-25S-16A	30	30	450	30	30	10	10	10	~	10	~
KTC7-25H — High Interrupting Capacity											
KTC7-25H-16A	65	30	450	65	30	65	30	65	30	65	30
KTC7-25H-20A	30	30	450	30	30	30	30	30	~	30	~
KTC7-45H — High Interrupting Capacity											
KTC7-45H-25A	65	30	600	65	30	65	30	65	30	65	30
KTC7-45H-32A	65	30	600	65	18	65	18	65	18	65	18

❶ UL 508, CSA 22.2 No. 14 for group installation, in connection with short-circuit protection device.
❷ UL 508 Part III.
❸ UL 508 Part IV.
❹ Type E applications require use of the KT7-xx-TE terminal adaptor on KT7s. Alternatively, compact busbar supply block KT7-_-A2E or -A3E meet Type E requirements for terminal spacing.
❺ Requires lockable twist knob (KT7-KN1 or KT7-KRY1 page F16) or lockable door coupling handle (KT7-HTN or KT7-HTRY page F15).

It should be noted that the KT7 Manual Motor Circuit Controller, when listed as a self-protected (Type E) device, is rated for Wye-connected power systems for voltages above 240 volts (i.e. 480Y/277 volts common in the United States or 600Y/347 volts common in Canada).

KTB7 Base Unit ❷

Maximum Horsepower						❶ Rated Operational Current [A]	Magnetic Release Response Current [A]	Catalog Number	Price
Typical Single Phase		Typical Three Phase [HP]							
115V	230V	200V	230V	460V	575V				
KTB7-25S — Standard Interrupting Capacity									
~	~	~	~	~	~	0.40	5.2	**KTB7-25S-0.4A**	**218**
~	~	~	~	~	1/2	1.0	13	**KTB7-25S-1.0A**	**249**
1/10	1/6	1/2	1/2	1	1-1/2	2.5	32	**KTB7-25S-2.5A**	**249**
KTB7-25…32H — High Interrupting Capacity									
1/10	1/6	1/2	1/2	1	1-1/2	2.5	32	**KTB7-25H-2.5A**	**312**
1/8	1/3	3/4	3/4	2	3	4	52	**KTB7-25H-4.0A**	**312**
1/2	1-1/2	2	3	5	7-1/2	10	130	**KTB7-25H-10A**	**312**
1	2	3	5	10	10	16	208	**KTB7-25H-16A**	**355**
2	3	7-1/2	7-1/2	15	20	25	325	**KTB7-25H-25A**	**355**
2	5	7-1/2	10	25	30	32	448	**KTB7-32H-32A**	**474**
KTB7-45H — High Interrupting Capacity									
2	5	7-1/2	7-1/2	15	20	25	325	**KTB7-45H-25A**	**510**
2	5	7-1/2	10	20	30	32	416	**KTB7-45H-32A**	**573**
3	7-1/2	10	15	30	40	45	585	**KTB7-45H-45A**	**573**

KTB7-25S

Description

The KTB7 is designed without a thermal trip element (i.e., current adjustment range). It should be selected for applications where a separate motor overload protection device is used. Magnetic trip is the same as the KTA7 (approximately 13x operational current).

❶ APPLICATION NOTE: Product Selection for Heavy Duty Starting Applications using KTB7-25S, KTB7-25H/32H and KTB7-45H Motor Circuit Controllers

The KTB7 Motor Circuit Controller is designed and tested to protect a motor circuit in case of a short circuit. A separate Sprecher + Schuh CEP7-EE_ overload relay with selectable trip class should be used to protect the motor against overload.

In Applications with motor starting times exceeding 10 seconds (heavy duty starting) the rated operational current (I_e) of the motor FLA must be multiplied by the following factors for selection of the KTB7 Motor Circuit Controller KTB7-25S, KTB7-25H/32H and KTB7-45H.

Trip classes according to UL 508 Section 52 and IEC 60947-4-1
CLASS 10 = 1.00 CLASS 15 = 1.22 CLASS 20 = 1.42
CLASS 25 = 1.58 CLASS 30 = 1.73
The maximum number of motor starts in 25 cycles/hour with a minimum OFF-time of 120 seconds between cycles. This additional calculation and selecting a larger frame size is necessary to compensate (dissipate) the increased heat resulting from long acceleration applications effecting the rated operational current of the KTB7.

Application Example:
Motor 480 VAC, 10 HP, I_e 14 FLA
Heavy duty starting application with start time of up to 18 seconds

Solution:
Starting time up to 18 seconds requires dimensioning for CLASS 20.

- Selection of the Motor Circuit Controller for Short Circuit Protection: Multiply the rated operational current I_e with factor for CLASS 20: $I_e(20)$ = 14 A x 1.42 = 19.9 A
- Select corresponding Sprecher + Schuh KTB7-25S, KTB7-25H/32H or KTB7-45H from catalog using next higher current rating: KTB7-25H-25A

❷ Horsepower ratings shown in the table are for reference only. The final selection of the manual starter depends on the actual motor full load current and service factor.

- For motor with service factor less than 1.15. Use motor nameplate full load current times 0.9 and choose the motor starter with the appropriate current range. Example: Motor F.L.C. = 4.2A; S.F. = 1.0. – (4.2A x 0.9 = 3.78A). Select Catalog Number KTA7-25S-4.0A.

KTB7 UL Ratings Application Chart

Device	Manual Motor Starter		Manual Controller for Group Installation ❶			Manual Controller as Motor Disconnect ❷	
	Max. Short Circuit Current [kA]		Max. Fuse or Circuit Breaker	Max. Short Circuit Current [kA]		Max. Short Circuit Current [kA]	
	480V	600V		480V	600V	480V	600V
KTA7-25S — Standard Interrupting Capacity							
KTB7-25S-0.4A	65	47	450	65	47	65	47
KTB7-25S-1.0A	65	47	450	65	47	65	47
KTB7-25S-2.5A	65	30	450	65	30	65	30
KTA7-25…32H — High Interrupting Capacity							
KTB7-25H-2.5A	65	30	450	65	30	65	30
KTB7-25H-4.0A	65	30	450	65	30	65	30
KTB7-25H-10A	65	30	450	65	30	65	30
KTB7-25H-16A	65	30	450	65	30	65	30
KTB7-25H-25A	30	30	450	30	30	30	30
KTB7-32H-32A	30	30	450	30	30	30	18
KTA7-45H — High Interrupting Capacity							
KTB7-45H-25A	65	30	600	65	30	65	30
KTB7-45H-32A	65	30	600	65	30	65	30
KTB7-45H-45A	65	18	600	65	18	65	18

❶ UL 508, CSA 22.2 No. 14 for group installation, in connection with short-circuit protection device.
❷ UL 508 Part III.

KTV7 Base Unit

Rated Operational Current (I_e)	Current Adjustment Range [A]	Nominal Magnetic Trip Current	Maximum Short Circuit Current [kA]		Maximum Horsepower Typical ❶❷ Three Phase [HP]				Catalog Number	Price
[A]	[A]	[A]	480Y/277V Type E	480V (group motor)	200V	230V	460V	575V		
KTV7-25H…32H — High Interrupting Capacity										
1.6	1.0…1.6	82	65	65	1/4	1/3	1	~	**KTV7-25H-1.6A**	**332**
2.5	1.6...2.5	82	65	65	1/2	3/4	1-1/2	~	**KTV7-25H-2.5A**	**332**
4.0	2.5...4.0	82	65	65	1	1	3	~	**KTV7-25H-4.0A**	**332**
6.3	4.0...6.3	82	65	65	1-1/2	2	5	~	**KTV7-25H-6.3A**	**332**
10	6.3...10	130	65	65	3	3	7-1/2	~	**KTV7-25H-10A**	**354**
16	10...16	208	65	65	5	5	10	~	**KTV7-25H-16A**	**378**
20	14.5...20	260	65	65	5	7-1/2	15	~	**KTV7-25H-20A**	**394**
25	18...25	325	30	30	7-1/2	7-1/2	20	~	**KTV7-25H-25A**	**407**
29	24...29	406	~	30	7-1/2	10	20	~	**KTV7-32H-29A**	**518**
32	27...32	448	~	30	7-1/2	10	25	~	**KTV7-32H-32A**	**518**

KTV7-25H

Horsepower ratings shown in the table are for reference only.
The final selection of the manual starter depends on the actual motor full load current and service factor.

- *For motor with service factor less than 1.15.* Use motor nameplate full load current times 0.9 and choose the motor starter with the appropriate current range. Example: Motor F.L.C. = 4.2A; S.F. = 1.0. – 4.2A x 0.9 = 3.78A. Select Catalog Number KTV7-25H-4.0A.

Description

The Sprecher+Schuh KTV7 series motor controllers are suitable for two types of applications under cULus listings:

(1) as a Manual, Self-protected Motor Controller or

(2) as a Manual Motor Controller with approval for group installation (and as a motor disconnect)

When UL/CSA listed as a manual, self-protected combination motor controller, the KTV7 provides all of the necessary NEC requirements for protection and control of individual motor branch circuits without additional protective devices (per NEC 430-52C option 6).

When KTV7 devices are applied a manual motor controllers in group installations, then NEC group installation rules state these devices must be applied per the appropriate rules, which require the use of an upstream BCPD-branch circuit protection device (per NEC 430-53C option 2).

The output frequency of the VFD must be limited to 400Hz or less to prevent thermal degradation. Various models of the KTV7 series self-protected combination motor controllers provide disconnection for motor branch circuits, branch-circuit and short-circuit protection (including magnetic protection), overload/thermal protection and manual switching.

The KTV7 self-protected combination motor controllers are current limiting and have a fixed magnetic trip. Interrupt ratings at 400V and 480V are available up to 65KalC. The VFD output pulse-width modulation frequency must be limited to 4 kilohertz or less. The circuit breakers provide motor overload protection with a trip class 10 characteristic.

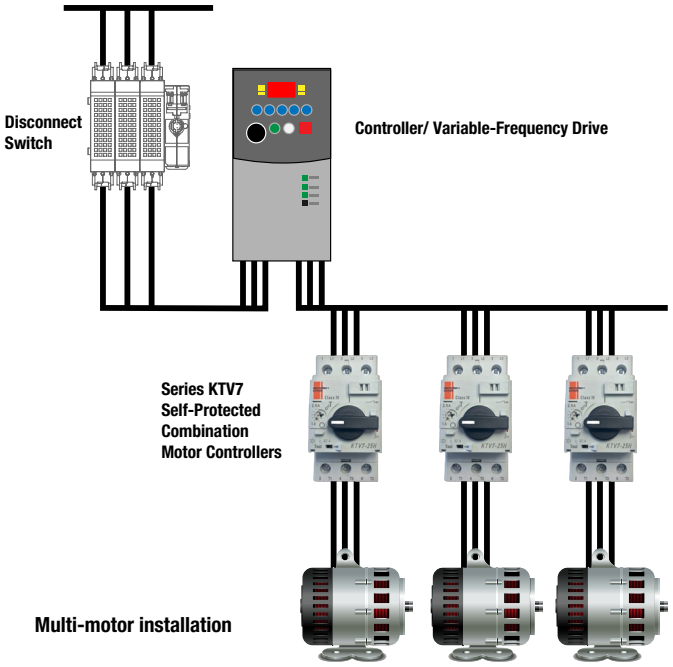

❶ HP ratings shown are for reference. Final selection of MPCB is determined by actual motor full load current.
❷ Not applicable at 575V.

KTV7 UL Ratings Application Chart

Device	Manual Controller for Group Installation ❶			Manual Controller as Motor Disconnect ❷❺		Suitable for Tap Conductor Protection		Self-Protected Type E Manual Combination Controller ❸❹❺	
	Max. Fuse or Circuit Breaker	Max. Short Circuit Current [kA]		Max. Short Circuit Current [kA]		Max. Short Circuit Current [kA]		Max. Short Circuit Current [kA]	
		480V	600V	480V	600V	480Y/277V	600Y/347V	480Y/277V	600Y/347V
KTV7-25H…32H — High Interrupting Capacity									
KTV7-25H-1.6A	450	65	~	65	~	65	~	65	~
KTV7-25H-2.5A	450	65	~	65	~	65	~	65	~
KTV7-25H-4.0A	450	65	~	65	~	65	~	65	~
KTV7-25H-6.3A	450	65	~	65	~	65	~	65	~
KTV7-25H-10A	450	65	~	65	~	65	~	65	~
KTV7-25H-16A	450	65	~	65	~	65	~	65	~
KTV7-25H-20A	450	65	~	65	~	65	~	65	~
KTV7-25H-25A	450	30	~	30	~	30	~	30	~
KTV7-32H-29A	450	30	~	30	~	~	~	~	~
KTV7-32H-32A	450	30	~	30	~	~	~	~	~

❶ UL 508, CSA 22.2 No. 14 for group installation, in connection with short-circuit protection device.
❷ UL 508 Part III.

Accessories for KT7

Accessory	Description	Operator Position ❶ OFF	Operator Position ❶ ON	Operator Position ❶ Tripped	Type	Connection Diagram and Terminal Markings ❷	For Use With	Catalog Number	Price
	Front-Mounted Auxiliary Contact • 1-pole or 2-pole • No additional space required • 300V max.	0	X	0	1 NO	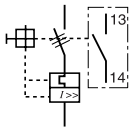	KTA7KTB7/ KTC7/KTV7 KTU7 ❸	**KT7-PE1-10**	**25**
		X	0	X	1 NC	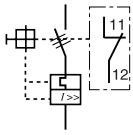	KTA7/KTB7/ KTC7/KTV7 KTU7 ❸	**KT7-PE1-01**	**25**
		0	X	0	1 NO	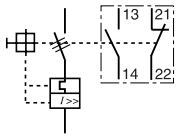	KTA7/KTB7/ KTC7/KTV7 KTU7 ❸ KF7	**KT7-PE1-11**	**32**
		X	0	X	1 NC				
		0	X	0	1 NO	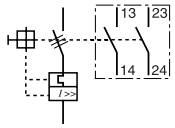	KTA7/KTB7/ KTC7/KTV7 KTU7 ❸	**KT7-PE1-20**	**32**
		0	X	0	1 NO				
		X	0	X	1 NC	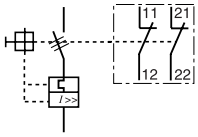	KTA7/KTB7/ KTC7/KTV7 KTU7 ❸	**KT7-PE1-02**	**32**
		X	0	X	1 NC				
	Right Side-Mounted Auxiliary Contact • 2-pole • Adds 9 mm to the width of the device • 600V max.	0	X	0	1 NO	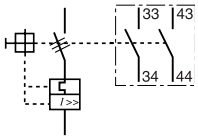	KTA7 KTB7 KTC7 KTV7	**KT7-PA1-20**	**47**
		0	X	0	1 NO				
		X	0	X	1 NC	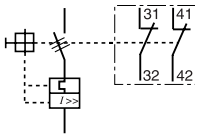	KTA7 KTB7 KTC7 KTV7	**KT7-PA1-02**	**47**
		X	0	X	1 NC				
		0	X	0	1 NO	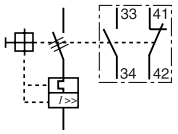	KTA7 KTB7 KTC7 KTV7	**KT7-PA1-11**	**47**
		X	0	X	1 NC				

❶ X=Contact Closed
O=Contact Open

❷

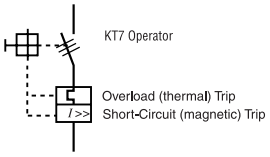

❸ When KT7-PE_ is used with KTU7 Circuit Breakers, KT7-PEFC Load Terminal Cover is required to comply with UL489 terminal clearance standards.

Accessories for KT7

Accessory	Description	Operator Position ❶ OFF	Operator Position ❶ ON	Operator Position ❶ Tripped	Type	Connection Diagram and Terminal Markings ❷	For Use With	Catalog Number	Price
	Front-Mounted Trip Contact • 2-pole • Indicates tripping of device • No additional space required • 300V max.	0	X	0	1 NO	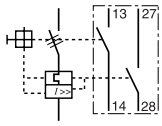	KTA7/KTB7/ KTC7/KTV7 KTU7 ❸	**KT7-PEF1-S10/N10**	**47**
		0	0	X	NO Trip (Short-Circuit & Overload)				
		X	0	X	1 NC	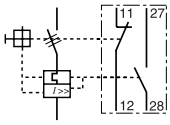	KTA7/KTB7/ KTC7/KTV7 KTU7 ❸	**KT7-PEF1-S10/N01**	**47**
		0	0	X	NO Trip (Short-Circuit & Overload)				
	Right Side-Mounted Trip Contact • 2-pole • Indicates tripping of motor protector • Adds 9 mm to the width of the device • 600V max.	0	0	X	NO Trip (Short-Circuit & Overload)	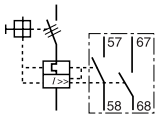	KTA7 KTB7 KTC7 KTV7	**KT7-PAF1-S10/M10**	**63**
		0	0	X	NO Trip (Short-Circuit)				
		0	0	X	NO Trip (Short-Circuit & Overload)	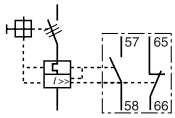	KTA7 KTB7 KTC7 KTV7	**KT7-PAF1-S10/M01**	**63**
		X	X	0	NC Trip (Short-Circuit)				
		X	X	0	NC Trip (Short-Circuit & Overload)	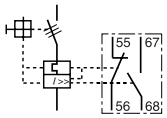	KTA7 KTB7 KTC7 KTV7	**KT7-PAF1-S01/M10**	**63**
		0	0	X	NO Trip (Short-Circuit)				
		X	X	0	NC Trip (Short-Circuit & Overload)	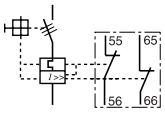	KTA7 KTB7 KTC7 KTV7	**KT7-PAF1-S01/M01**	**63**
		X	X	0	NC Trip (Short-Circuit)				
		0	0	X	NO Trip (Short-Circuit)	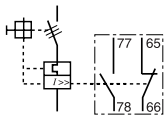	KTA7 KTB7 KTC7 KTV7	**KT7-PAF1-M11**	**63**
		X	X	0	NC Trip (Short-Circuit)				

❶ X=Contact Closed
O=Contact Open

❷ 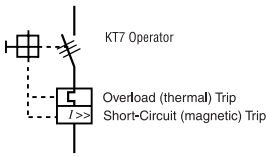

❸ When KT7-PE_ is used with KTU7 Circuit Breakers, KT7-PEFC Load Terminal Cover is required to comply with UL489 terminal clearance standards.

Accessories for KT7

Accessory	Description	For Use With	AC Coil Voltage 50 HZ	AC Coil Voltage 60 HZ	Catalog Number Shunt Trip	Catalog Number Undervoltage	Price
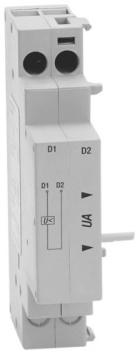	**Undervoltage Trip** • Left-side mounted • Adds 18 mm to the width of the KT7 device • Automatically trips motor protector when voltage falls below 35…70% **Shunt Trip** • Left-side mounted • Adds 18 mm to the width of the KT7 device • Trips motor protector when voltage is applied remotely	KTA7 ❸ KTB7 ❸ KTC7 ❸ KTV7 ❸ KTU7 ❹	12V	14V	**KT7-AA-14V**	**KT7-UA-14V**	110
			21V	24V	**KT7-AA-24V**	**KT7-UA-24V**	
			24V	28V	**KT7-AA-28V**	**KT7-UA-28V**	
			42V	48V	**KT7-AA-48V**	**KT7-UA-48V**	
			110V	**120V**	**KT7-AA-120V**	**KT7-UA-120V**	
			110V	127V	**KT7-AA-127V**	**KT7-UA-127V**	
			220...230V		**KT7-AA-230V**	**KT7-UA-230V**	
				240...260V	**KT7-AA-240V**	**KT7-UA-240V**	
			240V	277V	**KT7-AA-277V**	**KT7-UA-277V**	
			380V	460V	**KT7-AA-460V**	**KT7-UA-460V**	
			415V	**480V**	**KT7-AA-480V**	**KT7-UA-480V**	
			525V	600V	**KT7-AA-600V**	**KT7-UA-600V**	
			DC Coil Voltage		**Shunt Trip**	**Undervoltage**	**Price**
			9V DC		**KT7-AA-9D**	**KT7-UA-9D**	110
			12V DC		**KT7-AA-12D**	**KT7-UA-12D**	
			24V DC		**KT7-AA-24D**	**KT7-UA-24D**	
			36V DC		**KT7-AA-36D**	**KT7-UA-36D**	
			48V DC		**KT7-AA-48D**	**KT7-UA-48D**	
			60V DC		**KT7-AA-60D**	**KT7-UA-60D**	
			64V DC		**KT7-AA-64D**	**KT7-UA-64D**	
			72V DC		**KT7-AA-72D**	**KT7-UA-72D**	
			80V DC		**KT7-AA-80D**	**KT7-UA-80D**	
			110V DC		**KT7-AA-110D**	~	
			115V DC		**KT7-AA-115D**		
			125V DC		**KT7-AA-125D**		
			220V DC		**KT7-AA-220D**		
			230V DC		**KT7-AA-230D**		
			250V DC		**KT7-AA-250D**		

Undervoltage Trip Connection Diagram

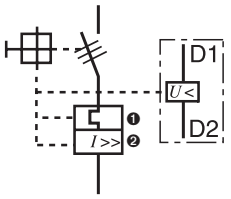

Shunt Trip Connection Diagram

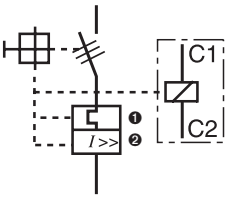

❶ For Overload (thermal) Trip of KT7.
❷ For Short-Circuit (magnetic) Trip of KT7.
❸ KTA7, KTB7, KTC7 and KTV7 can be used with Series A or later Trip Units.
❹ KTU7 can be used with Series B or later Trip Units.

Classic Handle Assembly, Type 1/4/4X/12

Accessory	Description	Color	Legend ❷	For use with...	Frame Size (Length)	Catalog Number	Price
	Classic Door Coupling Handle ❶❷❸ • For 3 padlocks 4...8 mm (5/16") diameter • Type 1/3/3R/4/4X/12 and IP66 • Interlock override capability • Can be modified for locking in ON position • Ships with coupling — order extension shaft and legend plate separately • See Technical Section for mounting depth information	Gray/Black	0 - I OFF -ON Trip	KTA7, KTB7, KTC7, KTV7 ❶❷ KTU7 ❸	65 x 65mm	**KT7-HTN**	**125**
		Red/Yellow	0 - I OFF -ON Trip		65 x 65mm	**KT7-HTRY**	**125**
	Extension Shaft ❶ • Cut to required length for mounting depth (adapter-door) • See Technical Section for mounting depth information			KT7-HTN KT7-HTRY KT3-100-HTN❻ KT3-100-HTRY❻	250 mm	**KT7-HT**	**23**
					400 mm	**KT7-HTL**	**50**

Contemporary Handle Assembly, Type 3R/3/4/4X NEW

Accessory	Description	Color	Legend ❷	For use with...	Frame Size (Length)	Catalog Number	Price
	Contemporary Door Coupling Handle ❺ • Screw Fixing • Type 3R, 3, 12, 4, 4X, IP66 • Field configurable for defeatable or non-defeatable • Ships with coupling — order extension shaft and legend plate separately • Requires 30mm hole for mounting	Black/Black	0 - I OFF -ON Trip	KTA7 KTB7 KTC7 KTV7 KTU7	48.7 x 47mm	**KT7-SB**	**54**
		Red/Yellow	0 - I OFF - ON Trip		48.7 x 47mm	**KT7-SY**	**54**
	Extension Shaft • Cut to required length for mounting depth (adapter-door) • See Technical Section for mounting depth information			KT7-SB KT7-SY	305mm (12")	**KT7-S1**	**24.50**
					533mm (21")	**KT7-S2**	**32**

Handle Accessories

Accessory	Description	For use with...	Catalog Number	Price
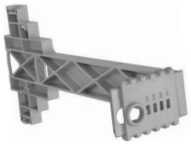	**Extension Shaft Support ❹** • Provides consistent alignment of the KT7 shafts with handle or door coupling • Recommended for shaft lengths >200mm (7.8 in) • 9mm in width and snaps on right side of KT_7 devices • Allows for one side-mount auxiliary	KT7-HT_ KT7-S_ KT7-N_	**KT7-SHS**	**28**
	Legend Plate • Marking: "Haupschalter" and "Main Switch" (Black/Gray) • Marking: "Not-Aus" and "Emergency Off" (Black/Yellow)	KT7-HT_ KT7-S_	**KT7-HTFCN** **KT7-HTFCRY**	**8.50**

❶ See Dimensions and Technical data in this section for design compatibility.
❷ KTA7, KTB7 and KTC7 can be used with Series D or later KT7-H_ Handle mechanism with "I-O" markings or Series E with "ON-OFF" markings.
❸ KTU7 requires Series E or later to comply with UL489 "ON-OFF" Trip markings.
❹ See page F37 for assembly example and dimensions.
❺ See page F38 for KT7-S_ handle dimensions.
❻ KT3-100-HTN(HTRY) handles are availble upon special request. Contact your Sprecher + Schuh representative for more information.

Accessories for KT_7 and KTA3

Accessory	Description	Color	For Use With	Catalog Number	Price
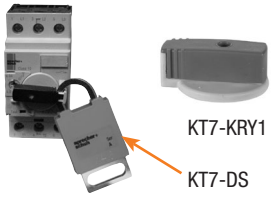 KT7-KRY1 KT7-DS	**Lockable Twist Knob** • For 1 padlock 4...5 mm (1/4") dia. shackle • Can be locked in OFF position	Black	KTA7, KTB7, KTC7, KTV7 KTU7	**KT7-KN1**	**10**
		Red/Yellow		**KT7-KRY1**	**15**
	Locking Tag • Padlock attachment to the lockable handles • Up to three padlocks 4...8 mm (5/16") shackle	Red	KT7-KN1 KT7-KRY1 KT7-45-KRY	**KT7-DS**	**37.50**
	Terminal Adapter for Type E Applications ❷ • Required on all KT7s used in UL Type E applications • May not be used with Bus Bars		KTA/B/C7/V7-25/32	**KT7-25-TE1**	**8.50**
			KTA/B/C7-45	**KT7-45-TE**	**8.50**
	Anti-Tamper Shield • Provides protection against inadvertent adjustment of the current setting • 10 pieces per package (price per piece)		KTA7 KTB7 KTC7 KTV7	**KT7-25-CA**	**31**
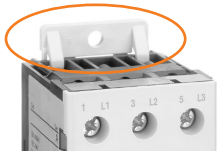	**Screw Adaptor** • For screw fixing of KT7 Motor Circuit Controller • 10 pieces per package (price per piece)		KTA7 KTB7 KTC7 KTV7 KTU7	**KT7-45-AS**	**16**

Marking Systems

Component	Description	Pkg. Qty.	Catalog Number	Price Each
	Label Sheet - 1 sheet with 105 self-adhesive paper labels each, 6 x17mm	1	**CA7-FMS**	**See page A54**
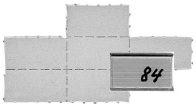	**Marking Tag Sheet -** 1 sheet with 160 perforated paper labels each, 6 x 17mm. To be used with transparent cover	1	**CA7-FMP**	
	Transparent Cover - To be used with Marking Tag Sheets	100 ❸	**CA7-FMC**	
	Tag Carrier - For marking with marker cards and tags. See page N40 for complete listing of available cards and tabs.	100 ❸	**CA7-FMA2**	

❶ Door Coupling Handles [Cat.# KT3-100-HTN or KT3-100-HTRY] are available for KTA3-100 when used in manual motor starter applications. KTA3-100 is not rated as a UL Type E disconnect. Contact your Sprecher + Schuh representative.

❷ Terminal Adaptors are supplied as standard on enclosed KT7 and CX7 starters, as well as, CL8, CL7 and CK7 assembled products, assuring they can be used in Type E applications. Alternatively, compact busbar supply block KT7-_-A2E or -A3E meet Type E requirements for terminal spacing.

❸ Minimum quantity is one package of 100. Price is each x 100 = total price.

Connecting Modules *(for connecting KTA7, KTB7 or KTC7 to CA8, CA7 AC coil, or CA7 Electronic DC coil contactors)* ❷

Module	Description	For Connecting. . .	To Contactor. . .	Catalog Number ❶	Price
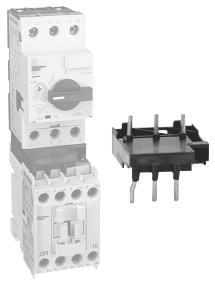	**Connecting Modules (forms Ecombo Starter) - ❶** • Provides electrical and mechanical interconnection of KT7 and CA8 (with AC or DC coils), CA7 (with AC coils) or CA7-_E (with Electronic DC coils). • Suitable for reversing and wye-delta kits • Ecombo starter (with KT7-25/32) mounts on a single DIN-rail (KT7 mounts on DIN-rail) • Ecombo starter (with KT7-45) can be mounted on two DIN-rails or on Mounting Modules (see selection table below) • Contactor coil mounted on load side	KT_7-25S..32S or KF7	CA8-9...12 12A max.	**KT7-25S-PEK12**	**38**
		KT_7-25S..32S or KF7	CA7-9...23 CA7-9E...23E	**KT7-25S-PEC23**	**46**
		KT_7-25H..32H	CA7-9...23 CA7-9E...23E	**KT7-25H-PEC23**	**46**
		KT_7-25H..32H	CA7-30...37 CA7-30E...37E	**KT7-25H-PNC37**	**46**
		KT_7-45H	CA7-30...37 CA7-30E...37E	**KT7-45H-PNC37**	**46**
		KT_7-45H	CA7-43 CA7-43E	**KT7-45H-PNC43**	**46**

Connecting Modules *(for connecting KTA7, KTB7 or KTC7 to CA7 to make CLT7 type assemblies)* ❷

Module	Description	For Connecting…	To Contactor. . .	Use Connector. . . ❶	Price	With Coil Module. . .	Price
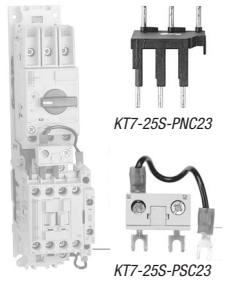	**Connecting Modules** • Provides electrical interconnection of KT7 and CA7 contactors • Contactor Coil Module extends A1/A2 Line Side terminals forward to facilitate wiring • Contactor and motor protector must be mounted on two DIN-rails or on Mounting Module (see selection table below)	KT_7-25S..32S or KF7	CA7-9..23	**KT7-25S-PNC23**	**46**	**KT7-25S-PSC23**	**22**
		KT_7-25H..32H		**KT7-25H-PNC23**	**46**		
		KT_7-25H..32H	CA7-30..37	**KT7-25H-PNC37**	**46**	**KT7-45H-PSC43**	**22**
		KT_7-45H		**KT7-45H-PNC37**	**46**		
		KT_7-45H	CA7-43	**KT7-45H-PNC43**	**46**		

Type W Mounting Modules

Module	Description	Width (mm)	Catalog Number	Price
	Short Mounting Module - Requires Connecting Module from tables above • Provides support for KT7 + CA7 or CA8 • Top rail is specifically designed for KT7 • Bottom rail is movable for easy assembly and disassembly • Complete unit mounts to two 35mm DIN-rails or one 70mm DIN-rail or screw mounts • 228 mm high	45	**W-32489**	**25**
		54	**W-32490**	**29**
	Long Mounting Module - See Section D for Connecting Modules • Provides support for KT7 + PCS Softstarter, CA7 + PCS Softstarter or KTB7 + CA7+CEP7 • Top rail is specifically designed for KT7 • Bottom rail is movable for easy assembly and disassembly • Complete unit mounts to two 35mm DIN-rails or one 70mm DIN-rail or screw mounts • 283 mm high	45	**W-32496**	**27**
		54	**W-32497**	**31**
	Spacer for Mounting Module - Fits between 45mm and 54mm for Reversing applications (228 mm high)	9	**W-32955**	**15**
	Dovetail Joints - Used to connect two mounting modules together. (Sold in packages of 50)		**W-32954**	**1**

❶ cURus Approved (File # E33916).
❷ Not for use with KTU7 Circuit Breakers

Compact Busbar System for KTA7, KTB7 and KTC7 Motor Controlers ❶❷❹

Accessory	Description	For Use With	Catalog Number	Price
	Compact Busbar — 45 mm Spacing (Rated 64 A) • For use with front-mounted auxiliary contact on KT_7 Motor Controllers Connects 2 Motor Controllers Connects 3 Motor Controllers Connects 4 Motor Controllers Connects 5 Motor Controllers	KT_7-25…32S KT_7-25…32H ❸	**KT7-32-DB-45-2** **KT7-32-DB-45-3** **KT7-32-DB-45-4** **KT7-32-DB-45-5**	**45** **52** **59** **66**
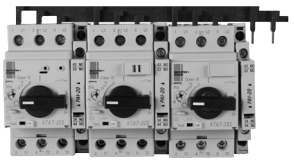	**Compact Busbar — 54 mm Spacing (Rated 64 A)** • For use with side-mounted auxiliary contact on KT_7 Motor Controllers Connects 2 Motor Controllers Connects 3 Motor Controllers Connects 4 Motor Controllers Connects 5 Motor Controllers	KT_7-25…32S KT_7-25…32H ❸	**KT7-32-DB-54-2** **KT7-32-DB-54-3** **KT7-32-DB-54-4** **KT7-32-DB-54-5**	**45** **52** **58** **66**
	Compact Busbar — 54mm Spacing (Rated 120 A) • For use with front-mounted auxiliary contact on KT_7 Motor Controllers Connects 2 Motor Controllers Connects 3 Motor Controllers Connects 4 Motor Controllers	KT_7-45H	**KT7-45-DB-54-2** **KT7-45-DB-54-3** **KT7-45-DB-54-4**	**91** **105** **120**
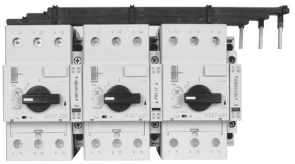	**Compact Busbar — 63 mm Spacing (Rated 120 A)** • For use with side-mounted auxiliary contact on KT_7 Motor Controllers Connects 2 Motor Controllers Connects 3 Motor Controllers Connects 4 Motor Controllers	KT_7-45H	**KT7-45-DB-63-2** **KT7-45-DB-63-3** **KT7-45-DB-63-4**	**91** **107** **120**
 KTA7-25S to 25H 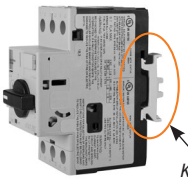 *KBH2*	**Spacer for KT_7-25…32H to KT_7-25…32S** • Accommodates difference in depth from KT_7-25H…32H to KT_7-25S…32S • Aligns terminals for compact bus bar connection	KT_7-25…32S to KT_7-25…32H ❸	**KBH2**	**9**
 A2E *A3E*	**Supply Block and Terminal** • For power connection to Compact Busbar — 600V, KT_7-25/32…63A max. / KT_7-45…120A maximum • Top feed — overlaps commoning link • Meets requirements for terminal spacing from source in Type E applications • KT7-25-A2E and KT7-45-A2E are primarily used for bottom cable feed	KT_7-25…32S or KT_7-25…32H ❸ KT_7-45H	**KT7-25-A2E** **KT7-32-A3E** **KT7-45-A2E** **KT7-45-A3E**	**57** **43** **150** **134**
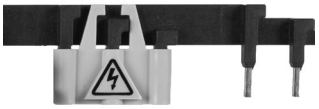	**Terminal Cover** • For covering of unused connection terminals • IP2X finger protection	KT_7-25...32 KT_7-45H	**KT7-32-DBA** **KT7-45-DBA**	**6.50** **8.50**

❶ UL Approved (File #E33916); CSA Approved (File #13908).
❷ Compact busbar may *not be* applied with KT7-25-TE1 or KT7-45-TE Terminal Adaptors. Either Terminal Adaptors or Bus Bar may be used, not both.
❸ KT7-25…32S and KT7-25…32H may not be combined without KBH2.
❹ Not for use with KTU7 Circuit Breakers

KF7 Fuse Holder to be used with KT7 or CA8/CA7 ❺

Accessory	Description	Approvals IEC/CE	Approvals UL/CSA	Catalog Number	Price
	KF7 Fuse Holder, CC - 30A	Yes	Yes	**KF7-D3C-C30**	**64**
Blown Fuse Indicator	KF7 Fuse Holder with Blown Fuse Indication, CC - 30A	Yes	Yes	**KF7-D3C-C30L**	**89**

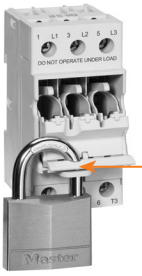

Lockable in Open Position

KF7 is Compatible with KT7 Compact Busbar ❹

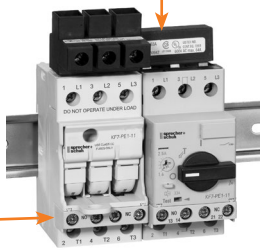

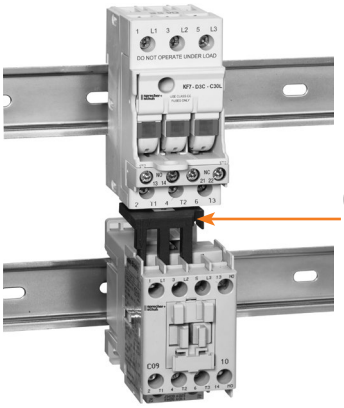

Connector to Contactor
❶
❷
❸

Applying KF7 with KTA7 Motor Circuit Controllers and CA7 Contactors

KF7 can be applied on the line side of a multiple small KTA7 motor circuit controller or a single KTA7 controller and CA7 contactors to increase the short-circuit protection of the group or a single branch circuit. KF7 is compatible with the KT7 compact bus bars (as shown in Section F), which reduces the space requirement as well as installation time.

Applying KF7 with CA7 Contactors

KF7 can be applied on the line side of CA7 contactors to increase the short-circuit withstand rating. The cUL withstand rating of CA7 when protected by Type "CC" fuses is increased to 100KAIC as shown on page A71.

Accessory	Connection Diagram	Description	Catalog Number	Price
	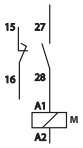	**Auxiliary Contact for KF7 Fuse Holder (1 NO Late Make + NC Early Break)** • NO Late Make, provides positive indication that power circuit is open • NC Early Break, provides capability for dropping out contactor before breaking current on fuse	**KF7-PE1-11**	**32**

❶ The KF7 terminal spacing and height are the same as KT_7-25S. Reference page F16 tables to select a connector.
❷ If using a KT7-25S-PEK12 (with CA8) or KT7-25S-PEC23 (with CA7), close couple connector, then the pair mounts on a single DIN rail under the KF7.
❸ Using a KT7-25S-PNC23 to mount a KF7 with a standard CA7 with AC Coil requires two DIN rails.
The A1-A2 terminals of a standard CA7 with AC Coil can be turned to the load side. In this case a KT7-25S-PSC23 would not be required.
❹ KF7 can not be mounted directly to a KT_7 using a PEM, PEC or PNC Connector. KF7, used in connection with a Compact Bus Bar, can provide Group Fusing protection for multiple bus bar connected KT_7.
❺ Schematic diagrams on page F32.

IEC Performance Data

		Catalog Number KTA7-25S...32S														
		0.16A	**0.25A**	**0.4A**	**0.63A**	**1A**	**1.6A**	**2.5A**	**4A**	**6.3A**	**10A**	**16A**	**20A**	**25A**	**29A**	**32A**
Rated Operational Current, I_e	[A]	0.16	0.25	0.4	0.63	1	1.6	2.5	4	6.3	10	16	20	25	29	32
Magnetic Release Current	[A]	2.1	3.3	5.2	8.2	13	21	33	52	82	130	208	260	325	406	448
Switching of Standard Three-Phase Motors																
AC-2, AC-3																
230/240V	[kW]	~	~	0.06	0.09	0.18	0.25	0.37	0.75	1.5	2.2	4.0	5.5	5.5	7.5	7.5
400/415V	[kW]	0.02	0.04	0.09	0.18	0.25	0.55	0.75	1.5	2.2	4.0	7.5	10	11	13	15
500V	[kW]	0.06	0.09	0.12	0.18	0.37	0.75	1.1	2.2	3.0	6.3	10	11	15	18.5	20
690V	[kW]	0.06	0.09	0.18	0.25	0.55	1.1	1.8	3.0	4.0	7.5	13	17	22	25	25
Back-up Fuses																
gG, gL, only if $I_{cc} \geq I_{cu}$																
230/240V	[A]	❶	❶	❶	❶	❶	❶	❶	❶	❶	❶	❶	100	100	125	125
400/415V	[A]	❶	❶	❶	❶	❶	❶	❶	❶	❶	❶	80	100	100	125	125
440/460V	[A]	❶	❶	❶	❶	❶	❶	❶	❶	❶	63	63	80	80	100	100
500V	[A]	❶	❶	❶	❶	❶	❶	❶	❶	❶	80	80	80	80	100	100
690V	[A]	❶	❶	❶	❶	❶	16	20	35	50	50	63	63	63	80	80
Ultimate Short-Circuit Breaking Capacity																
I_{cu}																
230/240V	[kA]	100	100	100	100	100	100	100	100	100	100	100	65	65	50	50
400/415V	[kA]	100	100	100	100	100	100	100	100	100	100	65	50	15	15	15
440/460V	[kA]	100	100	100	100	100	100	100	100	100	50	10	6	6	6	6
500V	[kA]	100	100	100	100	100	100	100	100	100	50	10	6	6	6	6
690V	[kA]	100	100	100	100	100	8	6	6	4	4	3	3	3	3	3
Rated Service Short-Circuit Breaking Capacity																
I_{cs}																
230/240V	[kA]	100	100	100	100	100	100	100	100	100	100	100	50	50	25	25
400/415V	[kA]	100	100	100	100	100	100	100	100	100	100	50	15	15	15	15
440/460V	[kA]	100	100	100	100	100	100	100	100	100	50	6	6	6	6	6
500V	[kA]	100	100	100	100	100	100	100	100	100	50	6	6	6	6	6
690V	[kA]	100	100	100	100	100	8	6	6	4	4	3	3	3	3	3

❶ No backup fuse required.

IEC Performance Data

		Catalog Number KTA7-25H...32H									Catalog Number KTA7-45H...					
		2.5A	**4A**	**6.3A**	**10A**	**16A**	**20A**	**25A**	**29A**	**32A**	**10A**	**16A**	**20A**	**25A**	**32A**	**45A**
Rated Operational Current, I_e	[A]	2.5	4	6.3	10	16	20	25	29	32	10	16	20	25	32	45
Magnetic Release Current	[A]	33	52	82	130	208	260	325	406	448	130	208	260	325	416	585
Switching of Standard Three-Phase Motors																
AC-2, AC-3																
230/240V	[kW]	0.37	0.75	1.5	2.2	4.0	5.5	5.5	7.5	7.5	2.2	4.0	5.5	6.3	7.5	13
400/415V	[kW]	0.75	1.5	2.2	4.0	7.5	10	11	13	15	4.0	7.5	10	11	15	22
500V	[kW]	1.1	2.2	3.0	6.3	10	11	15	18.5	20	6.3	10	11	15	20	30
690V	[kW]	1.8	3.0	4.0	7.5	13	17	22	25	25	7.5	13	17	22	30	40
Back-up Fuses																
gG, gL, only if $I_{cc} \geq I_{cu}$																
230/240V	[A]	❶	❶	❶	❶	❶	❶	❶	❶	❶	❶	❶	❶	❶	❶	❶
400/415V	[A]	❶	❶	❶	❶	❶	100	100	125	125	80	100	100	100	125	125
440/460V	[A]	❶	❶	❶	❶	80	100	100	125	125	80	100	100	100	125	125
500V	[A]	❶	❶	❶	❶	80	80	80	100	100	80	100	100	100	125	125
690V	[A]	20	35	50	50	63	63	63	80	80	63	80	80	80	100	100
Ultimate Short-Circuit Breaking Capacity																
I_{cu}																
230/240V	[kA]	100	100	100	100	100	100	100	65	65	100	100	100	100	100	100
400/415V	[kA]	100	100	100	100	100	100	65	50	50	100	100	100	100	65	65
440/460V	[kA]	100	100	100	50	50	50	50	25	25	65	65	65	65	65	50
500V	[kA]	100	100	100	50	50	50	50	25	25	50	50	50	50	50	50
690V	[kA]	10	10	6	6	6	6	6	6	6	10	10	10	10	10	10
Rated Service Short-Circuit Breaking Capacity																
I_{cs}																
230/240V	[kA]	100	100	100	100	100	100	100	50	50	100	100	100	100	100	100
400/415V	[kA]	100	100	100	100	50	25	25	25	25	50	50	50	50	50	50
440/460V	[kA]	100	100	100	50	50	25	25	20	20	50	50	50	50	50	50
500V	[kA]	100	100	100	50	50	25	25	20	20	50	50	50	50	50	50
690V	[kA]	10	10	6	6	4	4	4	4	4	10	10	10	10	6	6

❶ No backup fuse required.

IEC Performance Data

		Catalog Number KTB7-25S...						
		0.16A	**0.25A**	**0.4A**	**0.63A**	**1A**	**1.6A**	**2.5A**
Rated Operational Current, I_e	[A]	0.16	0.25	0.4	0.63	1	1.6	2.5
Magnetic Release Current	[A]	2.1	3.3	5.2	8.2	13	21	32
Switching of Standard Three-Phase Motors								
AC-2, AC-3								
230/240V	[kW]	~	~	0.06	0.09	0.18	0.25	0.37
400/415V	[kW]	0.02	0.04	0.09	0.18	0.25	0.55	0.75
500V	[kW]	0.06	0.09	0.12	0.18	0.37	0.75	1.1
690V	[kW]	0.06	0.09	0.18	0.25	0.55	1.1	1.8
Back-up Fuses								
gG, gL, only if $I_{cc} \geq I_{cu}$								
230/240V	[A]	❶	❶	❶	❶	❶	❶	❶
400/415V	[A]	❶	❶	❶	❶	❶	❶	❶
440/460V	[A]	❶	❶	❶	❶	❶	❶	❶
500V	[A]	❶	❶	❶	❶	❶	❶	❶
690V	[A]	❶	❶	❶	❶	❶	16	20
Ultimate Short-Circuit Breaking Capacity I_{cu}								
230/240V	[kA]	100	100	100	100	100	100	100
400/415V	[kA]	100	100	100	100	100	100	100
440/460V	[kA]	100	100	100	100	100	100	100
500V	[kA]	100	100	100	100	100	100	100
690V	[kA]	100	100	100	100	100	10	6
Rated Service Short-Circuit Breaking Capacity I_{cs}								
230/240V	[kA]	100	100	100	100	100	100	100
400/415V	[kA]	100	100	100	100	100	100	100
440/460V	[kA]	100	100	100	100	100	100	100
500V	[kA]	100	100	100	100	100	100	100
690V	[kA]	100	100	100	100	100	8	6

❶ No backup fuse required.

IEC Performance Data

		Catalog Number KTB7-25H...32H							Catalog No. KTB7-45H...		
		2.5A	**4A**	**6.3A**	**10A**	**16A**	**25A**	**32A**	**25A**	**32A**	**45A**
Rated Operational Current, I_e	[A]	2.5	4	6.3	10	16	25	32	25	32	45
Magnetic Release Current	[A]	32	52	82	130	208	325	448	325	416	585
Switching of Standard Three-Phase Motors											
AC-2, AC-3											
230/240V	[kW]	0.37	0.75	1.5	2.2	4.0	5.5	7.5	6.3	7.5	13
400/415V	[kW]	0.75	1.5	2.2	4.0	7.5	11	15	11	15	22
500V	[kW]	1.1	2.2	3.0	6.3	10	15	20	15	20	30
690V	[kW]	1.8	3.0	4.0	7.5	13	22	25	22	25	40
Back-up Fuses											
gG, gL, only if $I_{cc} \geq I_{cu}$											
230/240V	[A]	❶	❶	❶	❶	❶	❶	❶	100	125	125
400/415V	[A]	❶	❶	❶	❶	❶	100	125	100	125	125
440/460V	[A]	❶	❶	❶	❶	80	100	125	100	125	125
500V	[A]	❶	❶	❶	❶	80	80	100	100	125	125
690V	[A]	20	35	50	50	63	63	80	80	100	100
Ultimate Short-Circuit Breaking Capacity											
I_{cu}											
230/240V	[kA]	100	100	100	100	100	100	65	100	100	100
400/415V	[kA]	100	100	100	100	100	65	50	100	65	65
440/460V	[kA]	100	100	100	50	50	50	25	65	65	50
500V	[kA]	100	100	100	50	50	25	25	50	50	50
690V	[kA]	10	6	10	6	6	6	6	10	10	10
Rated Service Short-Circuit Breaking Capacity											
I_{cs}											
230/240V	[kA]	100	100	100	100	100	100	50	100	100	100
400/415V	[kA]	100	100	100	100	50	25	25	50	50	50
440/460V	[kA]	100	100	100	50	50	25	20	50	50	50
500V	[kA]	100	100	100	50	50	25	20	50	50	50
690V	[kA]	10	6	10	6	4	4	4	10	6	6

❶ No backup fuse required.

IEC Performance Data

		Catalog Number KTC7-25S...										
		0.16A	**0.25A**	**0.4A**	**0.63A**	**1A**	**1.6A**	**2.5A**	**4A**	**6.3A**	**10A**	**16A**
Rated Operational Current, I_e	[A]	0.16	0.25	0.4	0.63	1	1.6	2.5	4	6.3	10	16
Magnetic Release Current	[A]	3.2	5.2	8.2	13	21	32	52	82	130	208	260
Switching of Standard Three-Phase Motors												
AC-2, AC-3												
230/240V	[kW]	~	~	0.06	0.09	0.18	0.25	0.37	0.75	1.5	2.2	4.0
400/415V	[kW]	0.02	0.04	0.09	0.18	0.25	0.55	0.75	1.5	2.2	4.0	7.5
500V	[kW]	0.06	0.09	0.12	0.18	0.37	0.75	1.1	2.2	3.0	6.3	10
690V	[kW]	0.06	0.09	0.18	0.25	0.55	1.1	1.8	3.0	4.0	7.5	13
Back-up Fuses												
gG, gL, only if $I_{cc} \geq I_{cu}$												
230/240V	[A]	❶	❶	❶	❶	❶	❶	❶	❶	❶	❶	❶
400/415V	[A]	❶	❶	❶	❶	❶	❶	❶	❶	❶	❶	80
440/460V	[A]	❶	❶	❶	❶	❶	❶	❶	❶	❶	63	80
500V	[A]	❶	❶	❶	❶	❶	❶	❶	❶	❶	80	80
690V	[A]	❶	❶	❶	❶	❶	16	20	35	50	50	63
Ultimate Short-Circuit Breaking Capacity I_{cu}												
230/240V	[kA]	100	100	100	100	100	100	100	100	100	100	100
400/415V	[kA]	100	100	100	100	100	100	100	100	100	100	50
440/460V	[kA]	100	100	100	100	100	100	100	100	100	10	10
500V	[kA]	100	100	100	100	100	100	100	100	100	10	10
690V	[kA]	100	100	100	100	100	8	6	6	4	4	3
Rated Service Short-Circuit Breaking Capacity I_{cs}												
230/240V	[kA]	100	100	100	100	100	100	100	100	100	100	100
400/415V	[kA]	100	100	100	100	100	100	100	100	100	100	15
440/460V	[kA]	100	100	100	100	100	100	100	100	100	10	6
500V	[kA]	100	100	100	100	100	100	100	100	100	10	6
690V	[kA]	100	100	100	100	100	8	6	6	4	4	3

❶ No backup fuse required.

IEC Performance Data

		Catalog No. KTC7-25H...		Catalog No. KTC7-45H...	
		16A	**20A**	**25A**	**32A**
Rated Operational Current, I_e	[A]	16	20	25	32
Magnetic Release Current	[A]	260	325	416	585
Switching of Standard Three-Phase Motors					
AC-2, AC-3					
230/240V	[kW]	4.0	5.5	6.3	7.5
400/415V	[kW]	7.5	10	11	15
500V	[kW]	10	11	15	20
690V	[kW]	13	17	22	30
Back-up Fuses					
gG, gL, only if $I_{cc} \geq I_{cu}$					
230/240V	[A]	❶	❶	❶	❶
400/415V	[A]	80	100	100	125
440/460V	[A]	80	100	100	125
500V	[A]	80	80	100	125
690V	[A]	63	63	80	100
Ultimate Short-Circuit Breaking Capacity					
I_{cu}					
230/240V	[kA]	100	100	100	100
400/415V	[kA]	100	65	65	65
440/460V	[kA]	50	25	65	65
500V	[kA]	50	25	50	50
690V	[kA]	6	6	10	10
Rated Service Short-Circuit Breaking Capacity					
I_{cs}					
230/240V	[kA]	100	100	100	100
400/415V	[kA]	25	25	50	50
440/460V	[kA]	25	25	50	50
500V	[kA]	25	25	50	50
690V	[kA]	4	4	6	6

❶ No backup fuse required.

IEC Performance Data

		Catalog Number KTV7-25H...									
		1.6A	**2.5A**	**4.0A**	**6.3A**	**10A**	**16A**	**20A**	**25A**	**29A**	**32A**
Rated Operational Current, I_e	[A]	1.6	2.5	4.0	6.3	10	16	20	25	29	32
Magnetic Release Current	[A]	82	82	82	82	130	208	260	325	402	448
Switching of Standard Three-Phase Motors											
AC-3											
230/240V	[kW]	0.25	0.37	0.75	1.5	2.2	4	5.5	5.5	7.5	7.5
400/415V	[kW]	0.55	0.75	1.5	2.2	4	7.5	10	11	13	15
500V	[kW]	0.75	1.1	2.2	3	6.3	10	11	15	18.5	20
690V	[kW]	~	~	~	~	~	~	~	~	~	~
Back-up Fuses											
gG, gL, only if $I_{cc} \geq I_{cu}$											
230/240V	[A]	❶	❶	❶	❶	❶	❶	❶	❶	❶	❶
400/415V	[A]	❶	❶	❶	❶	❶	❶	100	100	125	125
440/460V	[A]	❶	❶	❶	❶	❶	80	100	100	125	125
500V	[A]	❶	❶	❶	❶	❶	80	80	80	100	100
690V	[A]	~	~	~	~	~	~	~	~	~	~
Ultimate Short-Circuit Breaking Capacity											
I_{cu}											
230/240V	[kA]	65	65	65	65	65	65	65	65	65	65
400/415V	[kA]	65	65	65	65	65	65	65	65	50	50
440/460V	[kA]	65	65	65	65	65	50	50	50	25	25
500V	[kA]	65	65	65	65	65	50	50	50	25	25
690V	[kA]	~	~	~	~	~	~	~	~	~	~
Rated Service Short-Circuit Breaking Capacity											
I_{cs}											
230/240V	[kA]	65	65	65	65	65	65	65	65	50	50
400/415V	[kA]	65	65	65	65	65	50	25	25	25	25
440/460V	[kA]	65	65	65	65	65	50	25	25	20	20
500V	[kA]	65	65	65	65	65	50	25	25	20	20
690V	[kA]	~	~	~	~	~	~	~	~	~	~

❶ No backup fuse required.

General Data

		KT7-25S/32S	KT7-25H/32H	KT7-45H
Rated Insulation Voltage				
IEC, SEV, VDE 0660		690V	690V	690V
UL, CSA		600V	600V	600V
Rated Impulse Withstand Voltage (main & auxiliary circuits)				
U_{imp}/pollution degree		6kV/3	6kV/3	6kV/3
Rated Frequency		50/60 Hz	50/60 Hz	50/60 Hz
Utilization Category				
• IEC 60949-2 (Motor Protector)		A	A	A
• IEC 60949-4-1 (Motor Starter)		AC-3	AC-3	AC-3
Life Span				
Mechanical	[operations]	100,000	100,000	30,000
Electrical (I_e max.)	[operations]	100,000	100,000	30,000
Switching Frequency	[operations]	max. 25/h. (motor starts)		
Ambient Temperature				
Storage		-40º C...+80º C		
Operation		-25º C...+60º C		
Resistance to Climatic Change		IEC 68-2		
Moisture / Heat Resistance	(600068-2-3)	40ºC, 93% relative humidity, 56 days		
Moisture / Change Resistance	(600068-2-3)	23ºC, 83% relative humidity / 40ºC, 92%, 50 cycles		
Dry Heat	(60086-2-2)	100ºC Relative Humidity <50% 7 Days		
Site Altitude		to 2,000 m N.N.		
Protection Class		KT_7-25/32_: IP2X from all directions KT_7-45: IP2X from front with front (upper) terminal wired		
Resistance to Shock	(60068-2-2)	30 G, 11 ms All Axes		
Resistance to Vibration	(60068-2-6)	5G		
Rated Thermal Current I_{th}				
IEC, SEV, VDE 0660				
Up to 60º C ambient temperature	[A]	0.1...32	1.6...32	6.3...45
Dependence on Temperature		40ºC - 60ºC No Reduction 70ºC 15% Reduction of the upper rated current I_e		
Overload Protection				
Characteristics		IEC60 947-4-1 Motor protection (except KTB7)		
Ambient temperature		-20º C...+60º C		
Compensation		yes, differential release		
Phase-failure protection		10 (Except KTB7)		
Trip Class				
Magnetic Release		fixed setting		
Response Current		13 x $I_e$max. (for KTC7)		
(+1 - 20%)		16...20 x $I_e$max. (for KTC7)		
		I_e max.=maximum values of setting ranges Fixed magnetic setting for KTV7, see ratings		
Total Power Loss P_v				
Motor protector at rated load				
Operating temperature	[W]	6...11.5	6...11.6	9...16
Application Conditions (KTV7)		PWM frequency ≤ 4kHz		
		VFD output frequency ≤ 400 Hz		

Weights

Description	Catalog Number	Weight
Motor Protectors	KTA7-25S/32S	317 g
	KTA7-25H/32H	373 g
	KTA7-45H	782 g
	KTB7-25S/32S	315 g
	KTB7-25H/32H	365 g
	KTB7-45H	782 g
	KTC7-25S/32S	315 g
	KTC7-25H/32H	365 g
	KTC7-45H	782 g
Auxiliary Contacts	KT7-PE1	10 g
	KT7-PA1	
	KT7-PEF1	15 g
	KT7-PAF1	
Undervoltage Trip	KT7-UA-✱	108 g
	KT7-AA-✱	110 g
	KT7-UA-L20-✱	116 g
Anti-Tamper Cover	KT7-25-CA	2 g

Description	Catalog Number	Weight
Lockable Twist Knob	KT7-KN1	5 g
	KT7-KRY1	
Locking Tag	KT7-DS	30 g
Door Coupling Handle	KT7-HTN	123 g
	KT7-HTRY	
Extension Shaft	KT7-HT	46 g
Legend Plate	KT7-HTFC	4 g
Feeder Terminal	KT7-32-A3E	172 g
	KT7-45-A3E	
Commoning Links	KT7-32-DB-45-2	47 g
	KT7-32-DB-45-3	80 g
	KT7-32-DB-45-4	104 g
	KT7-32-DB-45-5	132 g
	KT7-32-DB-54-2	52 g
	KT7-32-DB-54-3	86 g
	KT7-32-DB-54-4	118 g
	KT7-32-DB-54-5	154 g

General Data

	KT_7-25S/32S	KT_7-25H/32H	KT_7-45H
Features and Approvals			
Max. Current I_e	32 A	32 A	45 A
Current Rating	0.1…32 A	1.6…32 A	6.3…45 A
Short Circuit Protection	✓	✓	✓
Standard magnetic Trip	✓	✓	✓
High Magnetic Trip	✓	✓	✓
Magnetic Only Trip (MCP)	✓	✓	✓
Overload Protection	✓	✓	✓
Trip Class	✓	✓	✓
Application at output of VFD (multi-motor)		✓ (KTV7)	✓
Standards Compliance:			
CSA22.2, No. 14	✓	✓	✓
UL508 (Group Installation)	✓(see ratings)	✓(see ratings)	✓(see ratings)
UL508 Manual, Self-protected (Type E)	✓(see ratings)	✓(see ratings)	✓(see ratings)
UL508 (Overload Protection)	✓	✓	✓
IEC60947-1,-2	✓	✓	✓
IEC60947-4-1	✓	✓	✓
CE	✓	✓	✓
ATEX (IEC60079-14)	✓ (up to 25 A)	✓ (up to 25 A except KTV7)	✓
CCC	✓ (up to 25 A)	✓ (up to 25 A except KTV7)	✓
Accessories			
External Rotary Operator	✓	✓	✓
Auxiliary Contacts	✓	✓	✓
Trip Indicator Contacts	✓	✓	✓

Power Terminals				
Terminal Type				
Screwdriver			Pozidrive No. 2/Blade No. 3	Pozidrive No. 2/Blade No. 3
	1 conductor	[mm²]/[AWG]	1...4 / No. 16...10	2.5...16 / No. 14...4
	2 conductor	[mm²]/[AWG]	1...4 / No. 16...10	2.5...10 / No. 14...4
	1 conductor	[mm²]/[AWG]	1.5...6 / No. 16...8	2.5...16 / No. 14...4
	2 conductor	[mm²]/[AWG]	1.5...6 / No. 16...8	2.5...10 / No. 14...4
	1 conductor	[mm²]/[AWG]	1...6 / No. 16...10	2.5...25 / No. 14...4
	2 conductor	[mm²]/[AWG]	1...6 / No. 16...10	2.5...16 / No. 14...4
Tightening torque		[Nm]/[lb-in.]	2...2.5 / 18...22	3...3.5 / 27...30

❶ See page A10 for details of NEMA Contact Class.

Accessories for KT7 Motor Circuit Controllers

		Auxiliary Contact Blocks for Front Mounting Catalog Number KT7-PE1, KT7-PEF1			Auxiliary Contact Blocks for Right-Side Mounting Catalog Number KT7-PA1, KT7-PAF1				
IEC Rated Thermal Current I_{th}									
Rated Voltage	[V]	300 max.			600 max.				
at 40ºC ambient temperature	[A]	5			10				
at 60ºC ambient temperature	[A]	4			6				
UL/CSA Rated Thermal Current I_{th}									
Rated Voltage	[V]	300 max.			600 max.				
Continuous Thermal Current According to NEMA ❶		Class	Amps		Class	Amps			
	AC	B 300	5		B 600	5			
	DC	Q 300	2.5		Q 600	2.5			
Back-Up Fuses gG, gL	[A]	10			10				
Rated Thermal Current I_{th}									
AC-15	[V]	24	120	240	24	120	240	415	690
	[A]	4	3	1.5	6	5	3	2	0.7
DC-13	[V]	24	120	240	24	120	240	415	
	[A]	2	0.5	0.25	2	0.5	0.25	0.15	
Terminal Parts									
Terminal Type									
Screwdriver		Pozidrive No. 2/Blade No. 3			Pozidrive No. 2/Blade No. 3				
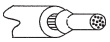 1 conductor	[mm²]/[AWG]	0.5...1.5 / No. 18...14			0.5...2.5 / No. 18...14				
2 conductor	[mm²]/[AWG]	0.75...1.5 / No. 18...14			0.75...2.5 / No. 18...14				
1 conductor	[mm²]/[AWG]	0.75...1.5 / No. 18...14			0.75...2.5 / No. 18...14				
2 conductor	[mm²]/[AWG]	0.75...1.5 / No. 18...14			0.75...2.5 / No. 18...14				
1 conductor	[mm²]/[AWG]	0.75...1.5 / No. 18...14			0.75...2.5 / No. 18...14				
2 conductor	[mm²]/[AWG]	0.75...1.5 / No. 18...14			0.75...2.5 / No. 18...14				
Tightening torque	[Nm]/[lb-in.]	1.2...1.5 / 10.6...13			1.2...1.5 / 10.6...13				
Lockable Twist Knob (KT7-KN1 & KT7-KRY1)									
Tightening torque	[Nm]/[lb-in.]	1 / 8.8 (T10)							
Mounting Depth – Door Coupling Handles (All KT7-HT...)									
Mounting Depth when using motor circuit controller:									
KT7-25S/32S	[mm]/[in.]	105.5 mm ± 5 mm (4.15” ± 3/16”)							
KT7-25H/32H	[mm]/[in.]	114.5 mm ± 5 mm (4.5” ± 3/16”)							
KT7-45H	[mm]/[in.]	137.1 mm ± 5 mm (5.4” ± 3/16”)							
Mounting Depth – Extension Shaft (KT7-HT)									
Mounting Depth range when using motor circuit controller:									
KT7-25S/32S	[mm]/[in.]	117...338 mm (4.6”...13.3”)							
KT7-25H/32H	[mm]/[in.]	126...347 mm (5.0”...13.7”)							
KT7-45H	[mm]/[in.]	149...369 mm (5.9”...14.5”)							

KT7 Accessories

		Undervoltage Trip for Left-Side Mounting Cat. Number KT7-UA-*	Undervoltage Trip with 2 Auxiliary Contacts for Left-Side Mounting Cat. Number KT7-UA-L20-*	Shunt Trip for Left-Side Mounting Cat. Number KT7-AA-*
Actuating Voltage	Pull-in Drop-out	0.85...1.1 x U_s 0.7...0.35 x U_s	0.85...1.1 x U_s 0.7...0.35 x U_s	0.7...1.1 x U_s
Rated Control Voltage	minimum maximum	21V 50 Hz, 24V 60 Hz 600V 50 Hz	21V 50 Hz, 24V 60 Hz 600V 50 Hz	21V 50 Hz, 24V 60 Hz 600V 50 Hz
On-Time		100%	100%	100%
Coil Rating	Pull-in Hold	8.5 VA, 6 W 3 VA, 1.2 W	8.5 VA, 6 W 3 VA, 1.2 W	8.5 VA, 6 W 3 VA, 1.2 W
Terminal Parts				
Terminal Type				
Screwdriver			Pozidrive No. 2/Blade No. 3	
1 conductor	[mm²]/[AWG]		0.5...2.5 / No. 18...14	
2 conductor	[mm²]/[AWG]		0.75...2.5 / No. 18...14	
1 conductor	[mm²]/[AWG]		0.75...2.5 / No. 18...14	
2 conductor	[mm²]/[AWG]		0.75...2.5 / No. 18...14	
1 conductor	[mm²]/[AWG]		0.75...2.5 / No. 18...14	
2 conductor	[mm²]/[AWG]		0.75...2.5 / No. 18...14	
Tightening torque	[Nm]/[lb-in.]		1.2...1.5 / 10.6...13.3	

			Feeder Block KT7-25-A2E	Feeder Terminal KT7-32-A3E	Compact Busbar KT7-32-DB...	Feeder Terminal KT7-45-A3E	Compact Busbar KT7-45-DB...
Rated Thermal Current I_{th}		[V]	600	600	600	600	600
at 60º C ambient temperature		[A]	64	64	64	120	120
	1 conductor	[mm²]/[AWG]	4...25/No. 10...4	2.5...25/No. 14...4	~	4...50/12...1/0	~
	1 conductor	[mm²]/[AWG]	4...25/No. 10...4	2.5...25/No. 14...4	~	2.5...50/12...1/0	~
	1 conductor	[mm²]/[AWG]	2.5...25/No. 14...4	2.5...25/No. 14...4	~	2.5...50/12...1/0	~
Tightening torque		[Nm]/[lb-in.]	3...3.5 / 27...31	3...3.5 / 27...31	~	5...6/45...54	~

KF7 Fuse Holder Accessories

			KF7 Fuse Holder
Rated Thermal Current I_{th}		[V]	600
at 60º C ambient temperature		[A]	30
Short Circuit			
Withstand		[KA]	200
U_{imp}		[KV]	6
Terminal Parts			
Terminal Type			
Screwdriver			Pozidrive No. 2/Blade No. 3
	1 conductor	[mm²]/[AWG]	1.0…4 / 16…10
	1 conductor	[mm²]/[AWG]	1.0…4 / 16…10
Tightening torque		[Nm]/[lb-in.]	1.7 / 15

Time-Current Characteristic

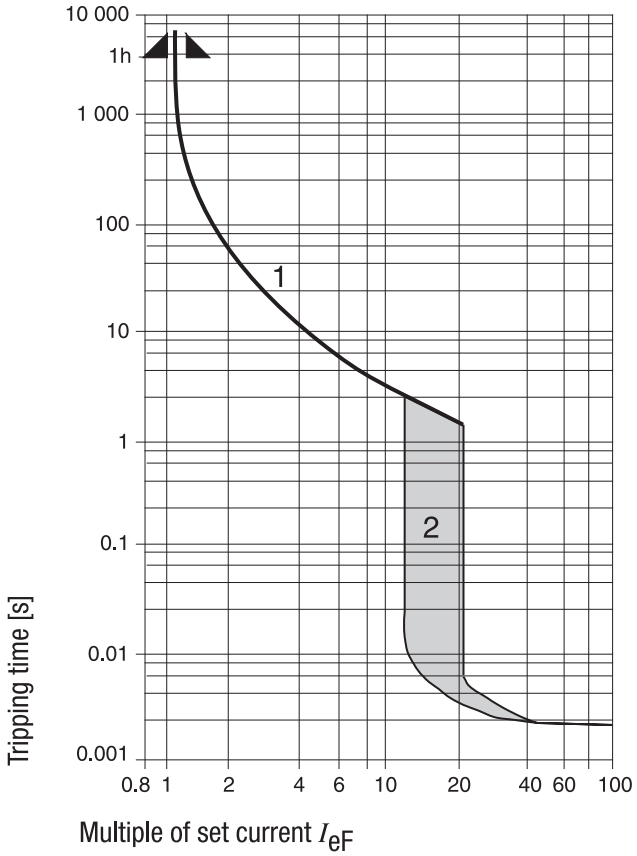

KTA7 Motor Protection (for KTV7, see ratings)

1. Thermal Release Trip Current

The adjustable current-dependent delayed bimetal release protects motors against overload. The curve shows the mean operating current at an ambient temperature of 20°C starting from the cold state. Careful testing and setting ensures effective motor protection even in the case of single-phasing. The overload characteristic is also valid for transformer protection.

2. Magnetic Release Trip Current

The instantaneous magnetic trip has a fixed operating current setting. This corresponds to 13 times the maximum value of setting range (high inrush protection -20 x I_e maximum). At a lower overload setting the magnetic trip is correspondingly higher.

Current Setting I_{ef}

The overload trip corresponds to a thermal overload relay in a motor starter conforming to IEC 947-4-1. If a different value is prescribed (e.g., reduced I_e for cooling medium having a temperature higher than 40°C or a place of installation higher than 2000 m above sea level), the setting current is equal to the reduced rated current I_e of the motor.

Cut-off Current ❶

KTA/B/C7-25/32S
Max. Cut-Off-Current, Ue = 500V

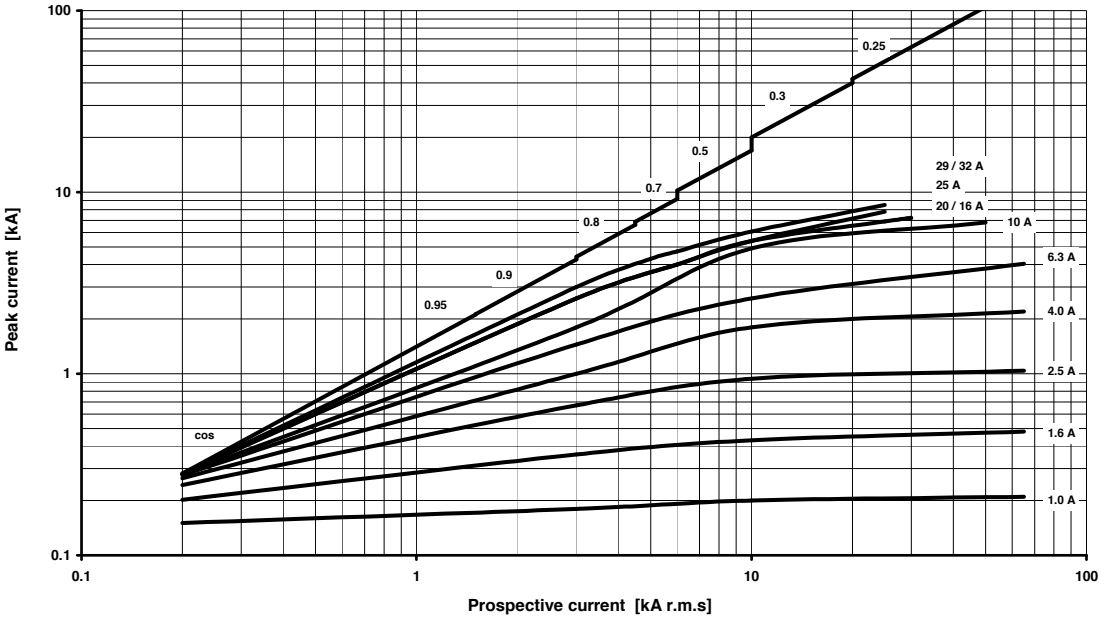

KTA/B/C7-25/32H
Max. Cut-Off Current, U_e = 500V

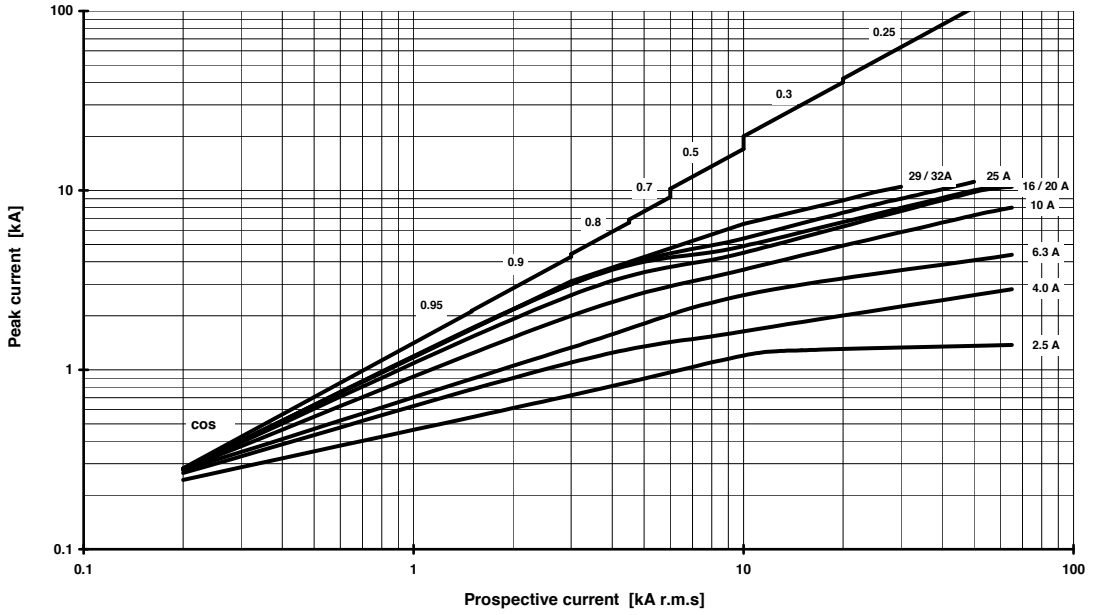

❶ A full size (8-1/2 x 11) set of "Maximum Cut-Off Current (Let-Thru Current)" and "Maximum Let-thru Energy (I2t)" curves for 400…145V, 500V and 690V can be downloaded from http://www.sprecherschuh.com.

Cut-off Current ❶

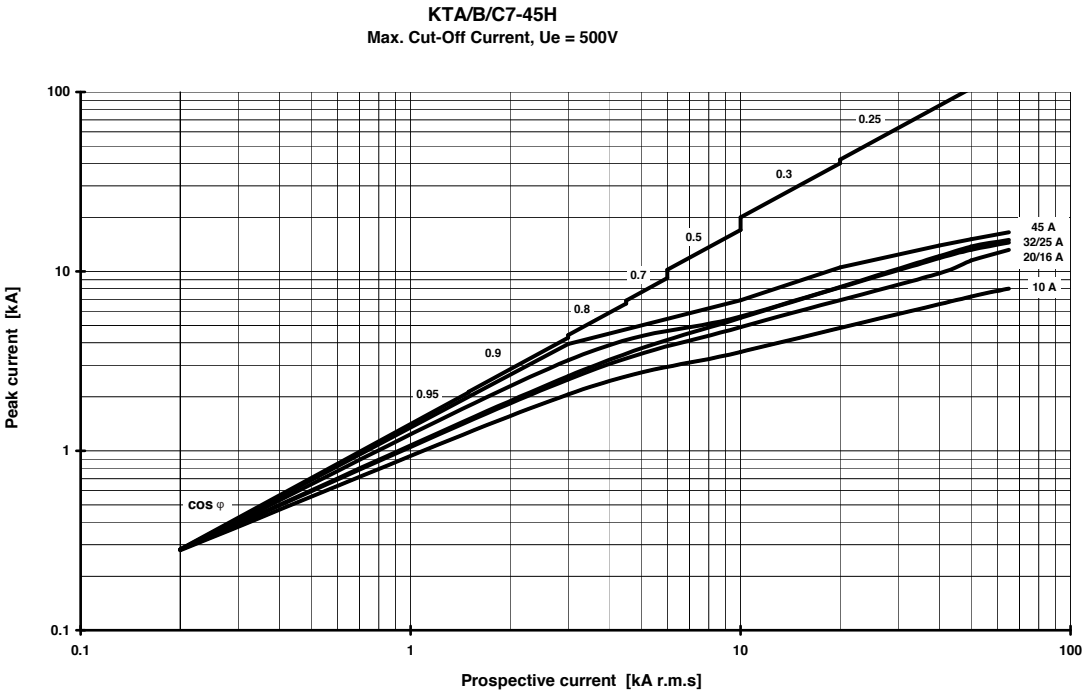

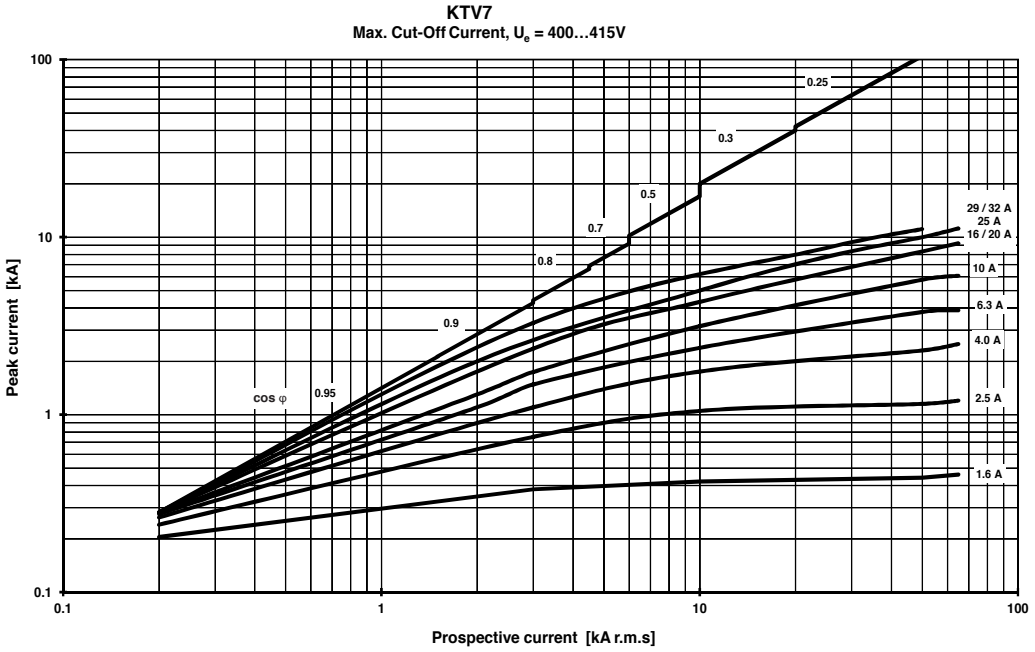

❶ A full size (8-1/2 x 11) set of "Maximum Cut-Off Current (Let-Thru Current)" and "Maximum Let-thru Energy (I2t)" curves for 400…145V, 500V and 690V can be downloaded from http://www.sprecherschuh.com.

Let-Through Energy ❶

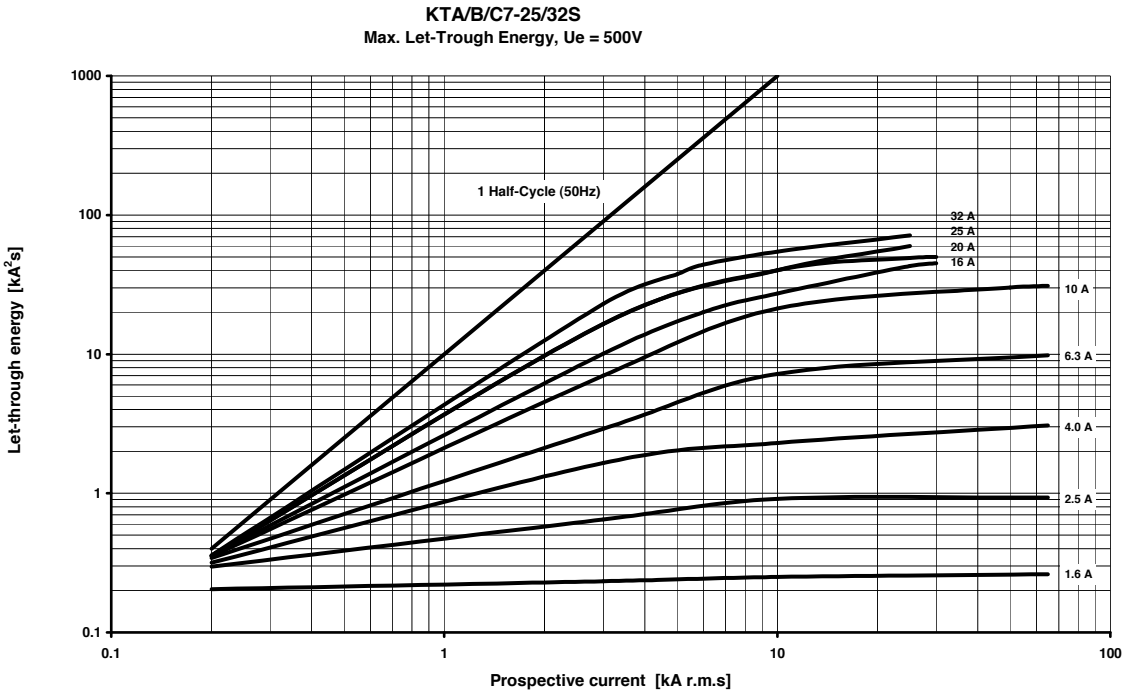

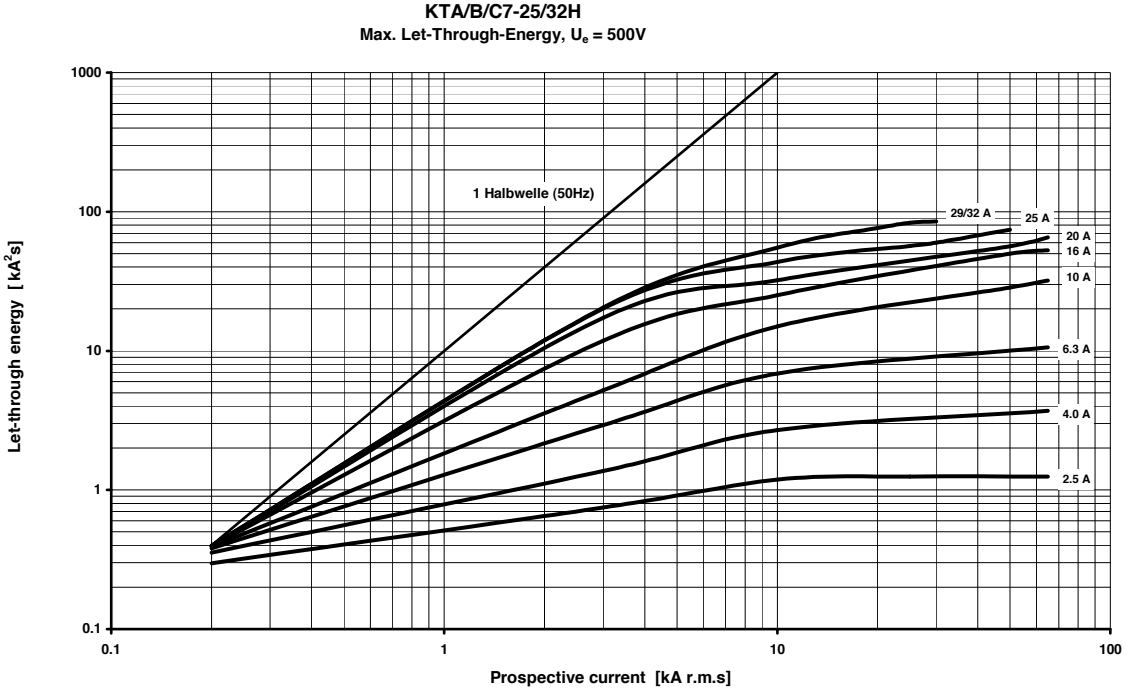

❶ A full size (8-1/2 x 11) set of "Maximum Cut-Off Current (Let-Thru Current)" and "Maximum Let-thru Energy (I2t)" curves for 400…145V, 500V and 690V can be downloaded from http://www.sprecherschuh.com.

Let-Through Energy ❶

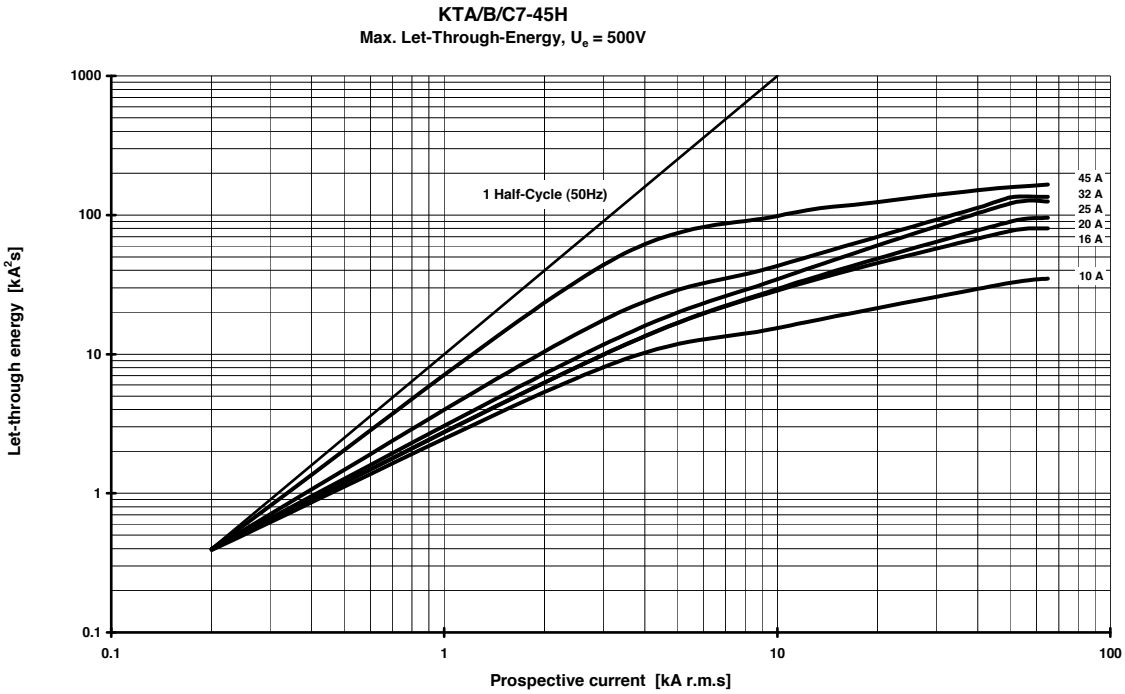

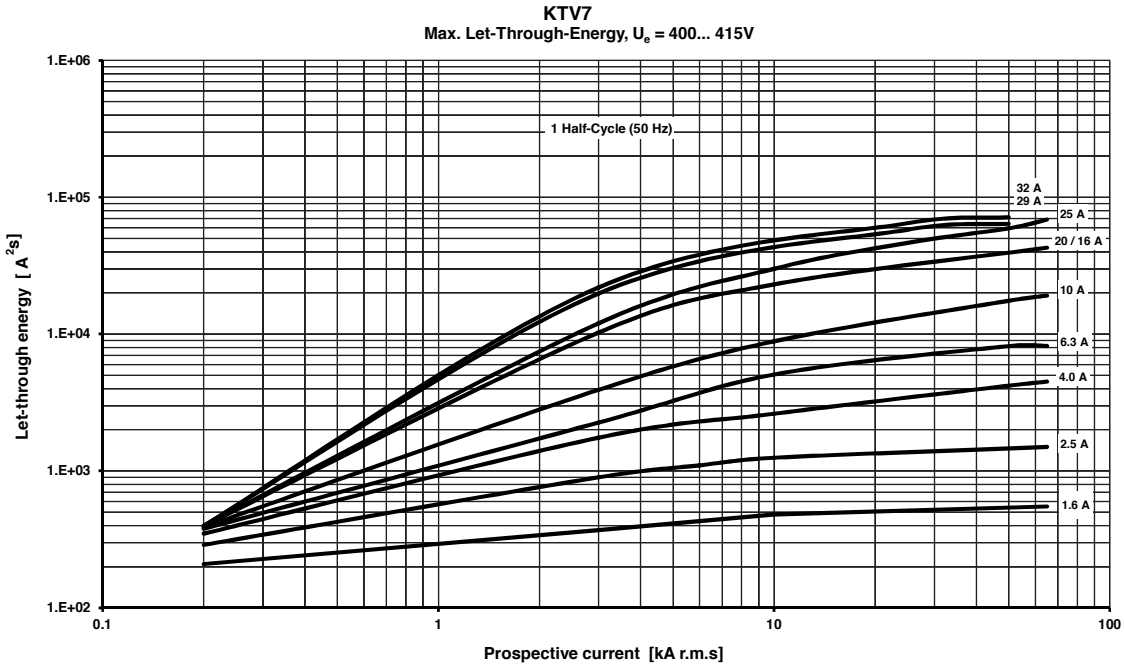

❶ A full size (8-1/2 x 11) set of "Maximum Cut-Off Current (Let-Thru Current)" and "Maximum Let-thru Energy (I2t)" curves for 400…145V, 500V and 690V can be downloaded from http://www.sprecherschuh.com.

KF7 Fuse Holder used with CA7 Contactor

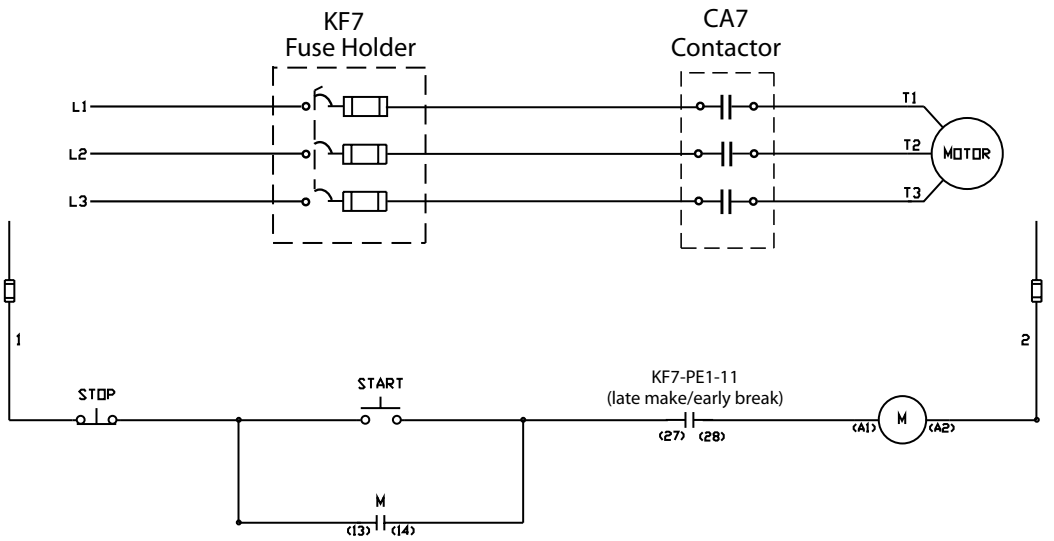

KF7 Fuse Holder used with KTA7 Motor Circuit Controller and CA7 Contactor

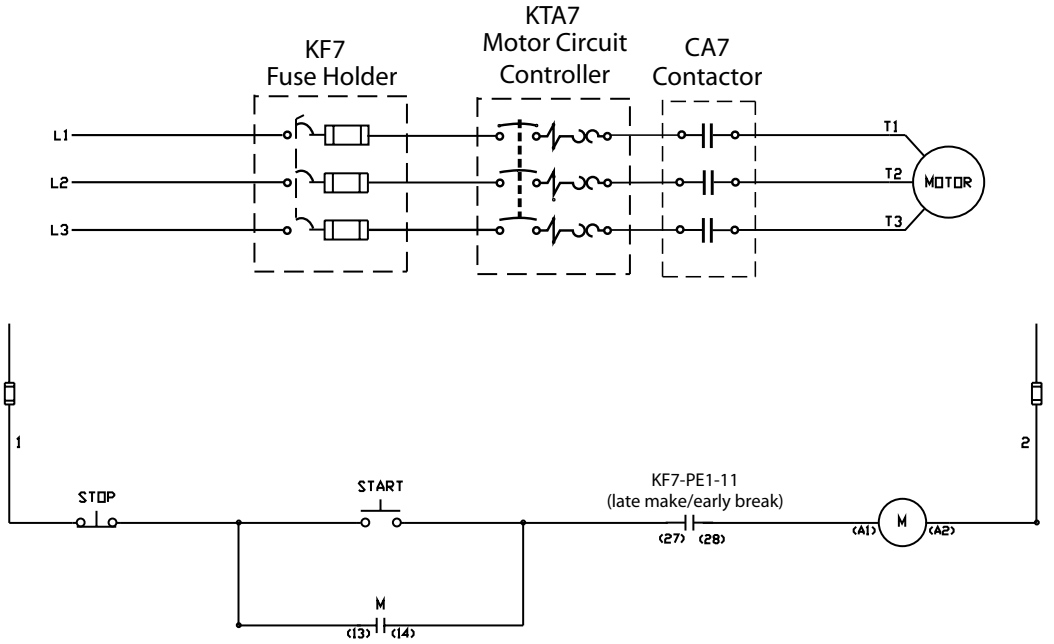

KTA7/KTB7 & KTC7 Bus Bar and Supply Blocks

Dimensions are in millimeters (inches). Dimensions not intended for manufacturing purposes.

KT7-32-A3E

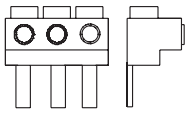

KT7-45-A3E

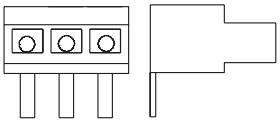

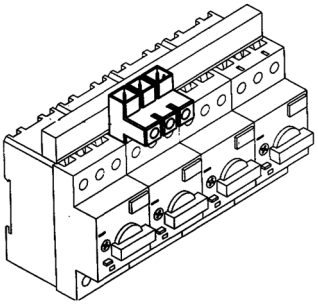

KT7-32-DB

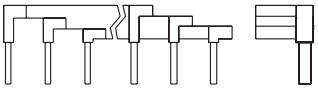

KT7-45-DB

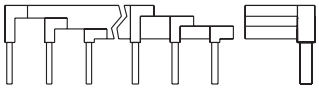

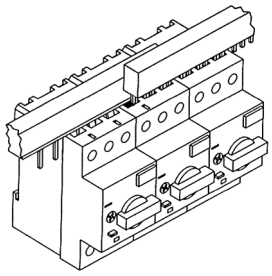

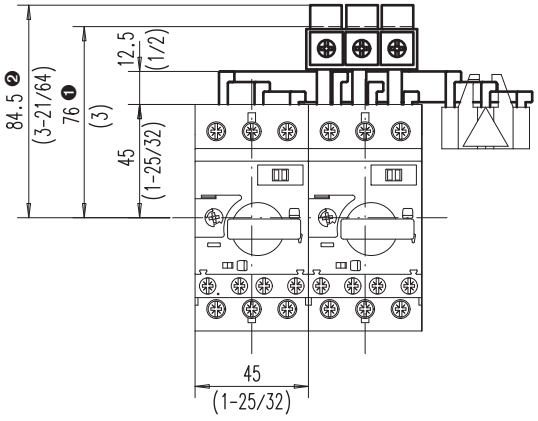

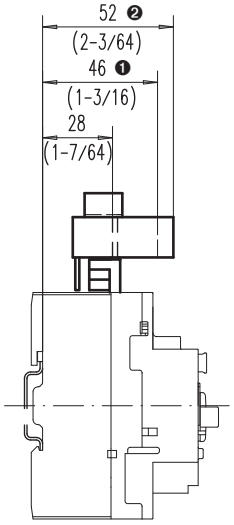

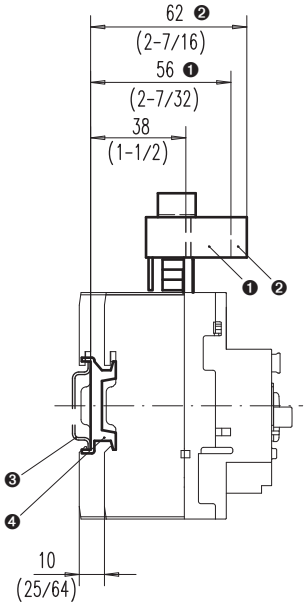

❶ Compact Busbar Feeder Terminal IEC
❷ Compact Busbar Feeder Terminal UL type E and IEC
❸ Mounting on 35 mm DIN Rail
❹ Top Hat Rail Adapter 10 mm

KT_7-25/32 Motor Circuit Controllers *(withTerminal Adaptor KT7-25-TE1)*

Dimensions are in millimeters (inches). Dimensions not intended for manufacturing purposes.

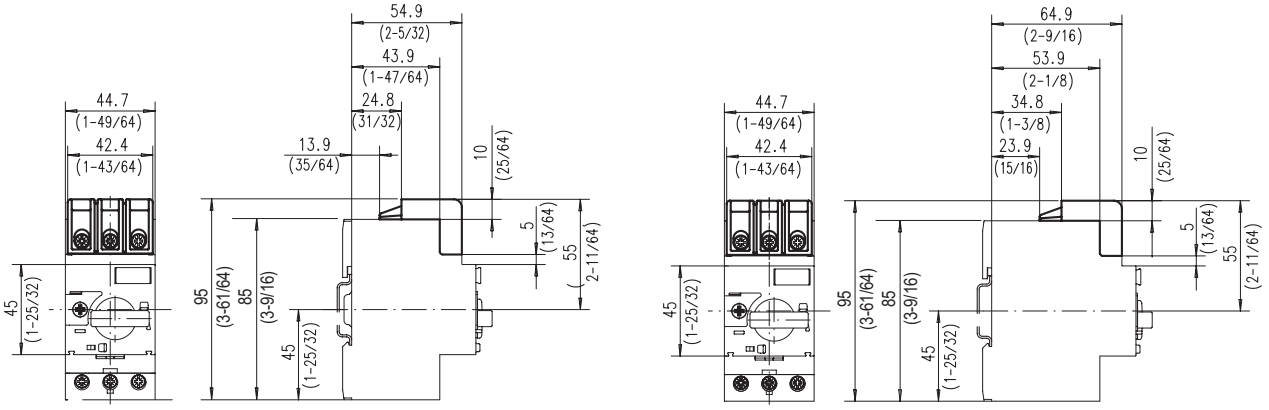

KT_7-25S/32S

KT_7-25H/32H

KT_7-45H Motor Circuit Controllers *(with Terminal Adaptor KT7-45-TE)*

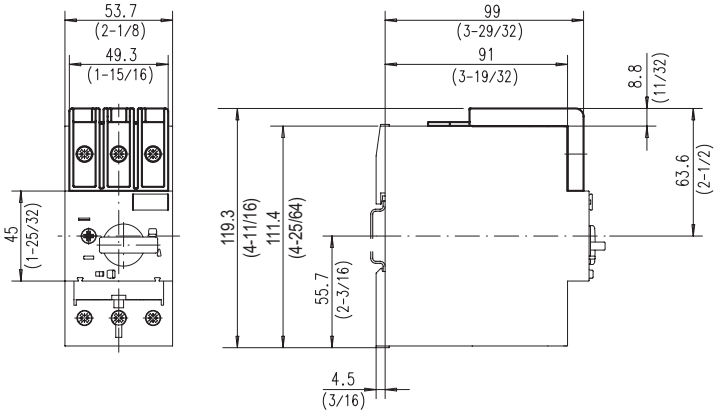

KT_7-45H Motor Circuit Controllers *(without Terminal Adaptor KT7-45-TE)*

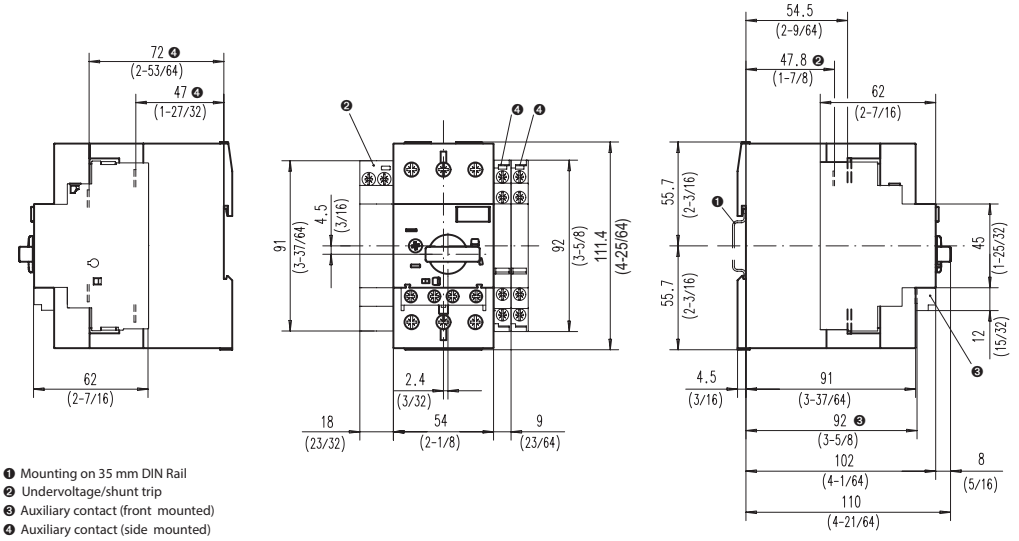

❶ Mounting on 35 mm DIN Rail
❷ Undervoltage/shunt trip
❸ Auxiliary contact (front mounted)
❹ Auxiliary contact (side mounted)

KTV7-25/32 Motor Circuit Controllers

Dimensions are in millimeters (inches). Dimensions not intended for manufacturing purposes.

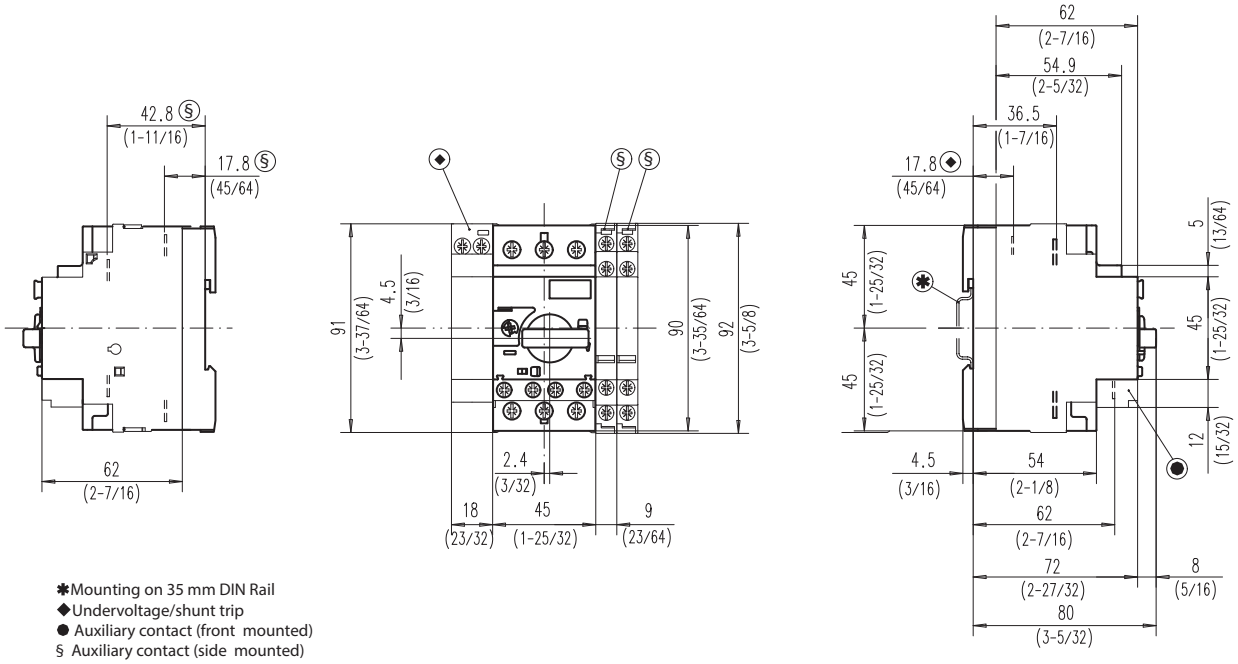

✱Mounting on 35 mm DIN Rail
◆Undervoltage/shunt trip
● Auxiliary contact (front mounted)
§ Auxiliary contact (side mounted)

Minimum distance to grounded parts or walls

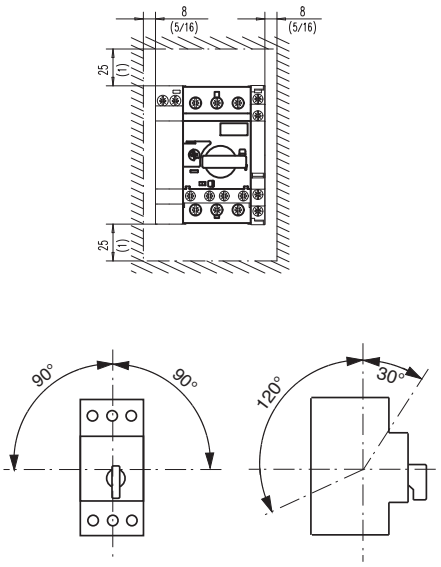

KT7-TE1 Type E adapter on KTV7

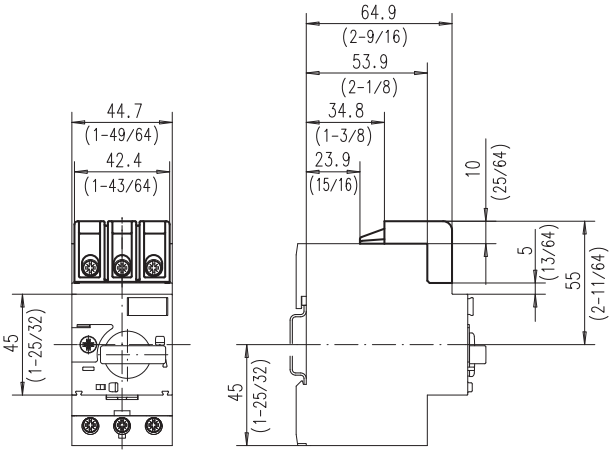

KT7 Motor Circuit Controllers Mounting/Safety Clearance

Dimensions are in millimeters (inches). Dimensions not intended for manufacturing purposes.

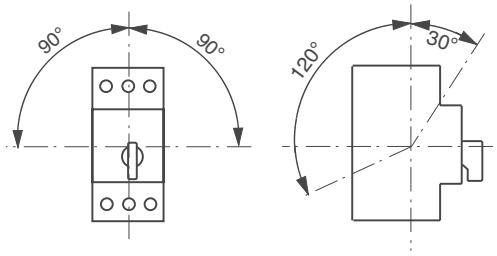

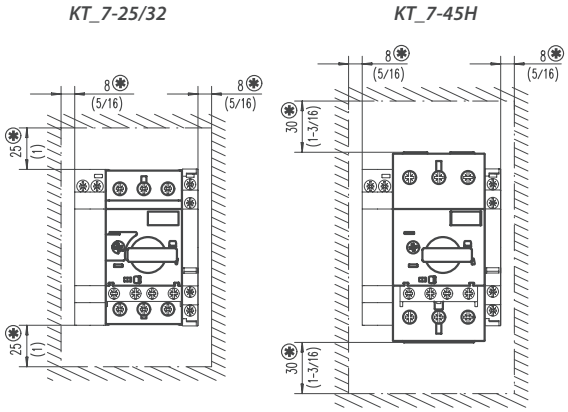

✱ Minimum distance to grounded parts or walls

KT7-45-AS Screw Adapter

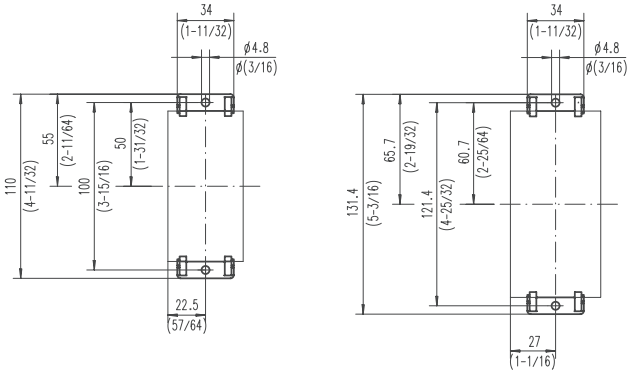

KT7-25-A2E Terminal Block

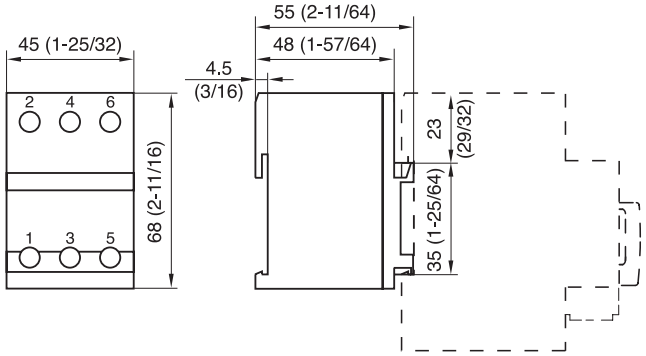

Mounting Position KT7, KTU7, & KTA3

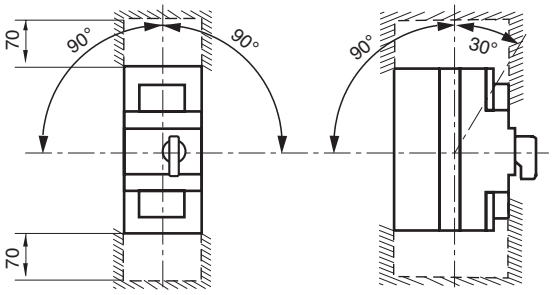

Mounting position/safety clearance

KT7-HTN/HTRY Motor Circuit Controller Door Coupling Handle

Dimensions are in millimeters (inches). Dimensions not intended for manufacturing purposes.

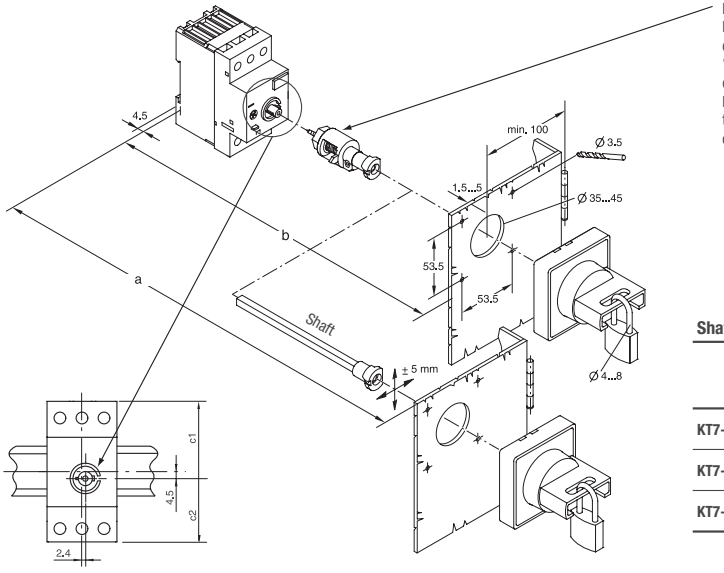

KT7-HTC Coupling is included in Door Handle Kits KT7-HTN and KT7-HTRY. This coupling replaces the knob shipped as standard on the controller. Design "D" Door Coupling Handle Kits include an interface for the "Stops" molded into Design "C" KTA7/KTB7/KTC7 Controllers, which inhibits excessive rotation of the handle mechanism. The old Design "C" Door Handle Kits will fit new Design "C" Controllers (shipped in WHITE boxes), but will not take advantage of the "Stops". Design "D" Door Handle Kits are backward compatible.

Shaft Dimensions

	a		b	c1	c2
	Includes 250mm Shaft KT7-HT	Includes 400mm Shaft KT7-HTL	No Shaft		
KT7-25S/32S	117…338 (4.6…13.3 in)	117…488 (4.6…19.2 in)	105.5 ± 5	49.5	40.5
KT7-25H/32H	126…347 (5.0…13.7 in)	126…497 (5.0…19.6 in)	114.5 ± 5	49.5	40.5
KT7-45H	148.6…369.6 (5.9…14.5 in)	148.6…519 (5.9…20.4 in)	137.1 ± 5	59.35	50.35

If using KT7-SHS Shaft Support see page F37 for dimensions

KTA7/KTB7/KTC7 with CA7 Connection Modules and Kits

Ecombo 1)

KT7-25S-PEC23
KT7-25H-PEC23

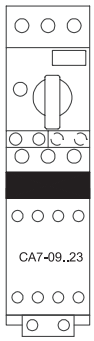

Standard Connection Modules 2)

KT7-25S-PNC23
KT7-25H-PNC23

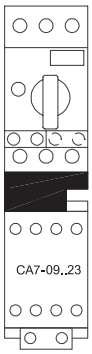

KT7-25H -PNC37

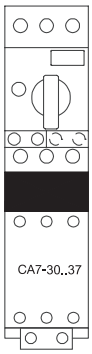

KT7-45H-PNC37

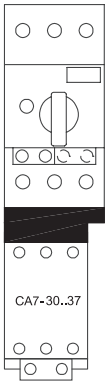

KT7-45H-PNC43

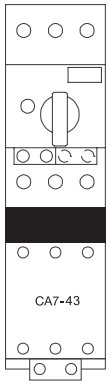

Coil Extension Modules 3)

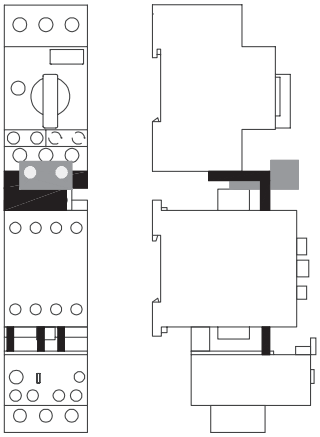

1) Ecombo Modules
Electrical and mechanical connection between motor circuit controller and contactors with AC coil. For CA7-9...23 only. Compatible with the reversing- and WYE-delta starter components.

2) Standard Connection Modules
Electrical connection between motor circuit controller and contactors with AC coil. For CA7-9...45. Compatible with the reversing- and WYE-delta starter components.

3) Coil Extension Modules
Simplifies access to the coil terminals on 3-component starters.
For CA7-9...23 = **KT7-25S-PSC23**
For CA7-30...43 = **KT7-45H-PSC43**

KT7 Handle Assembly with KT7-SHS Shaft Support

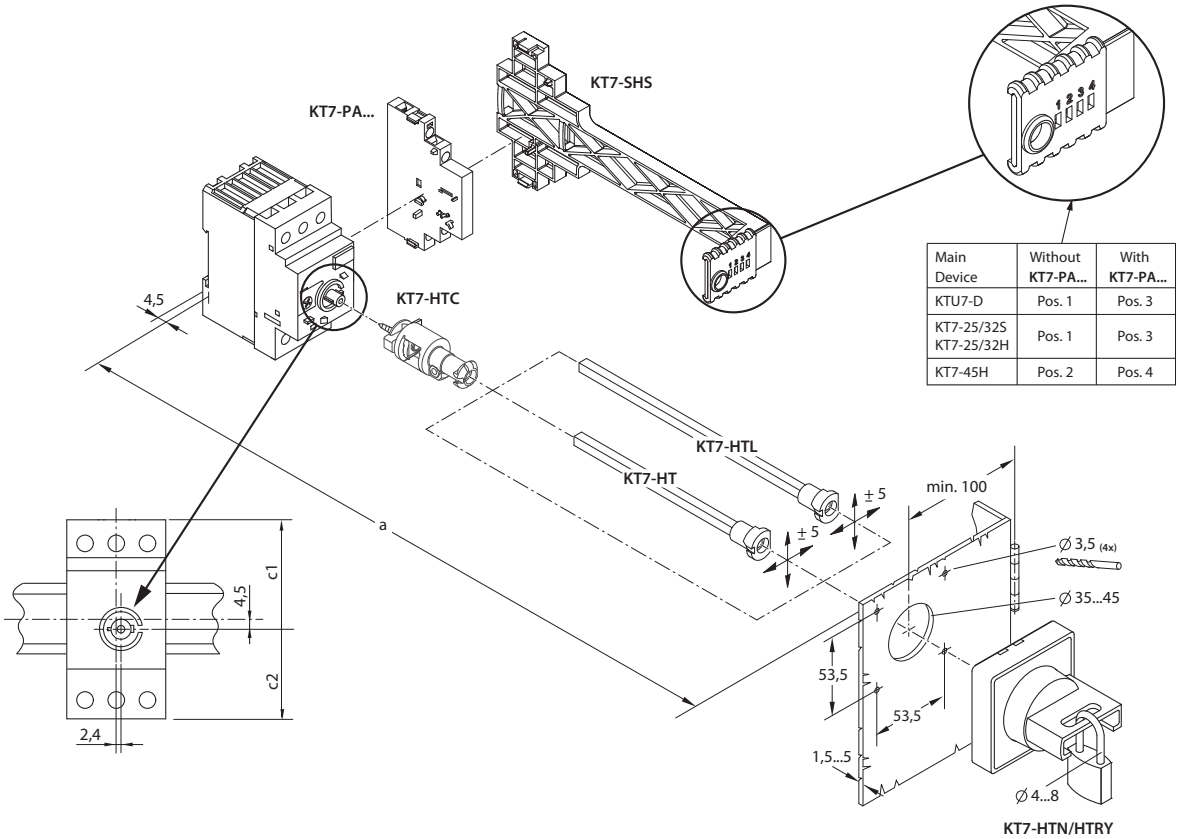

Main Device	Without KT7-PA...	With KT7-PA...
KTU7-D	Pos. 1	Pos. 3
KT7-25/32S KT7-25/32H	Pos. 1	Pos. 3
KT7-45H	Pos. 2	Pos. 4

	a KT7-HT	a KT7-HTL	Use KT7-SHS when a >	c1	c2
KT7-25/32S	117...338	117...488	260	49.5	40.5
KT7-R25S	117...338	117...488	260	49.2	41.5
KT7-25/32H	127...348	127...497	270	49.5	40.5
KT7-45H	148.6...369.6	148.6...519	300	59.35	50.35
KTU7-D	127...348	127...497	270	55.5	46.5

Assembling Aid

KT7-SHS Shaft Support Dimensions

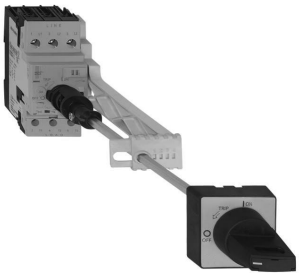

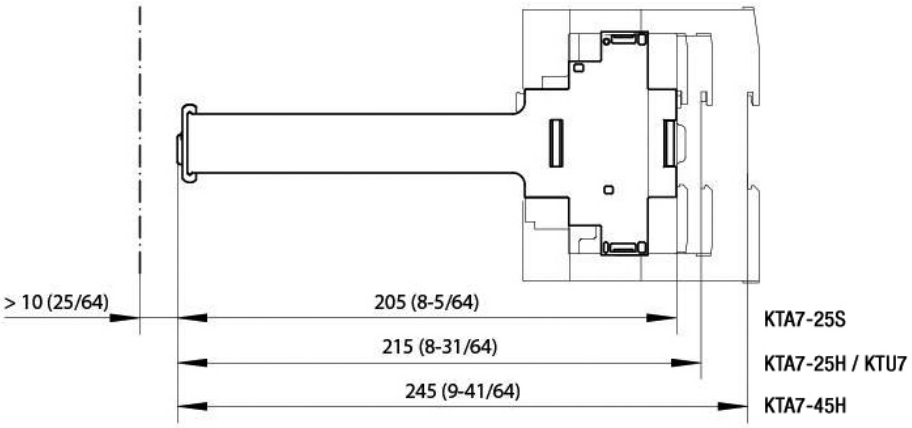

KT7-SY/SB Switch Handle

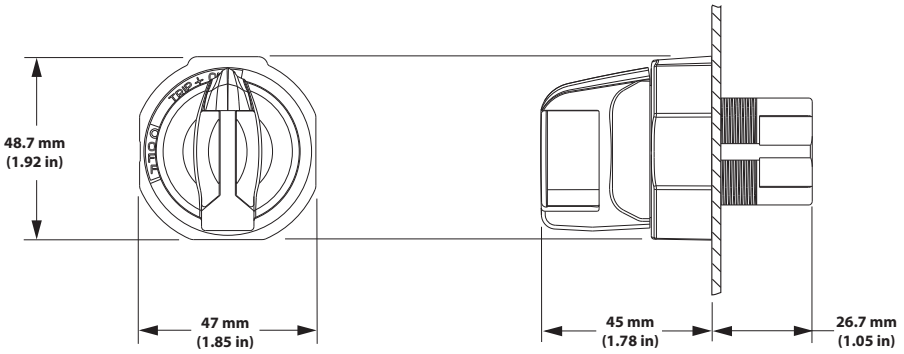

KT7-SY/SB Assembly

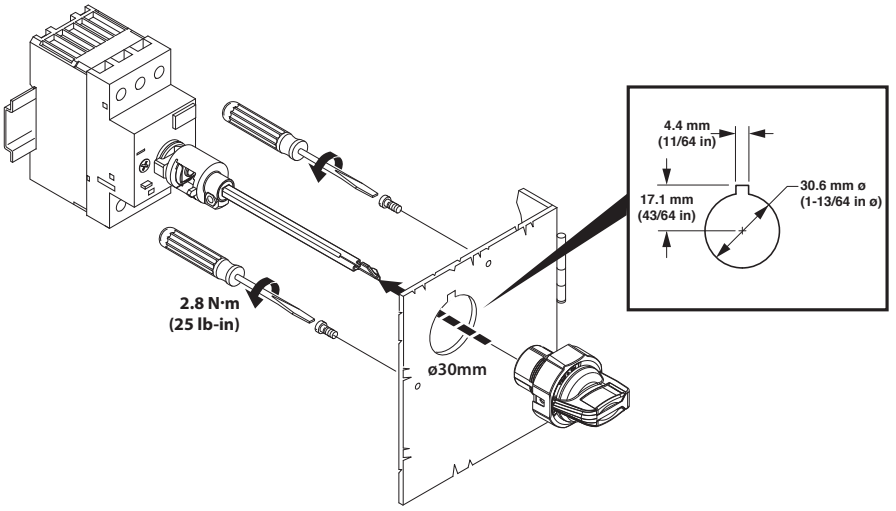

Type W Mounting Modules & Spacer ❶

Dimensions are in millimeters (inches). Dimensions not intended for manufacturing purposes.

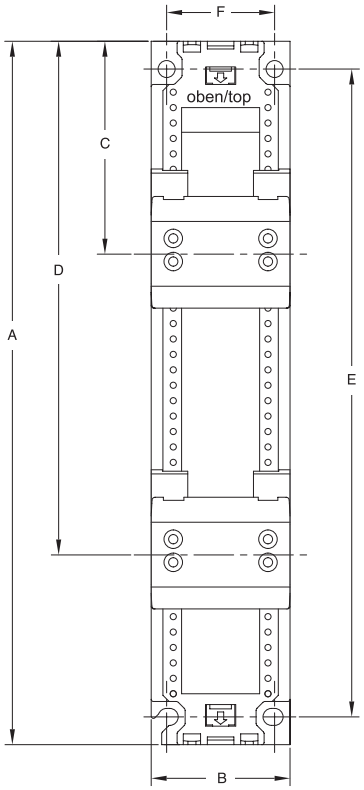

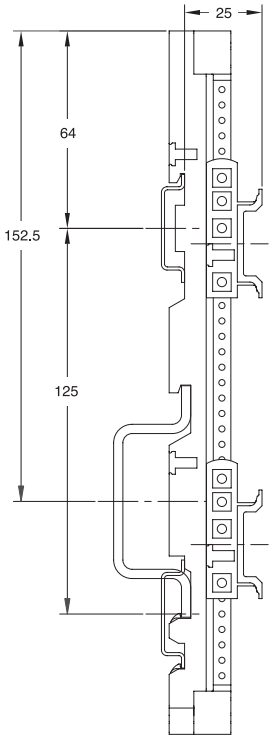

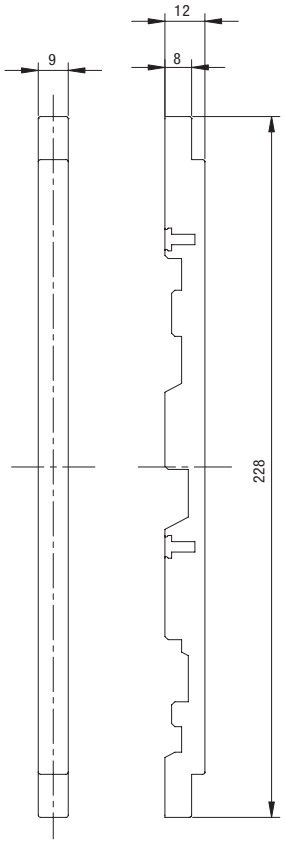

Spacer W-32955

Catalog Number	A	B	C	D	E	F
W-32489	228 (8-31/32)	45 (1-25/32)	69 (2-23/32)	165.5 (6-35/64)	210 (8-17/64)	35 (1-3/8)
W-32490	228 (8-31/32)	54 (2-1/8)	69 (2-23/32)	174 (6-27/32)	210 (8-17/64)	40 (1-37/64)
W-32496	283 (11-9/64)	45 (1-25/32)	69 (2-23/32)	166.5 (6-35/64)	265 (10-7/16)	40 (1-37/64)
W-32497	283 (11-9/64)	54 (2-1/8)	69 (2-23/32)	174 (6-27/32)	265 (10-7/16)	40 (1-37/64)

❶ Use Pozidriv #1 (PZ1) screwdriver on DIN rail screws.

KF7 Fuse Holders Dimensions

Dimensions are in millimeters (inches). Dimensions not intended for manufacturing purposes.

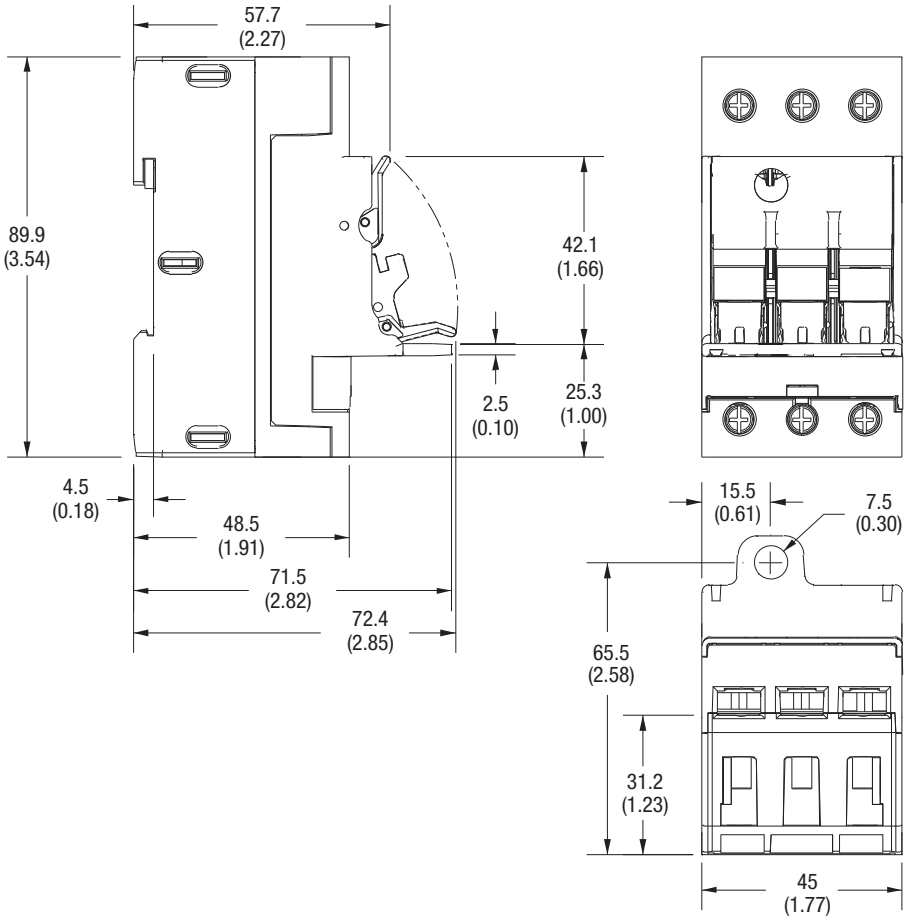

KF7 Fuse Holders Wiring Diagram (IEC)

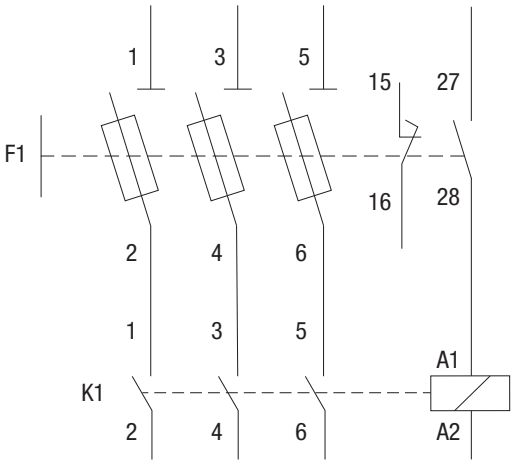

Series KTU7 UL489 Molded Case Circuit Breakers

Versatile, convenient and space saving… for a variety of applications

Sprecher+Schuh's KTU7 series of UL Molded Case Circuit Breakers are UL489 and CE listed for global applications. The current limiting circuit breaker provides fixed short circuit and overcurrent protection and offers high interrupting ratings for 2- and 3-pole devices from 0.5 to 30A. These Circuit breakers are 100% rated up to 10A.

Accessories are intelligently designed to be field installed. The compact busbars and supply blocks reduce wiring errors and installation labor cost. Connection modules for the CA7 Contactors simplify wiring and can reduce the number of DIN rails required, compacting panel space even further.

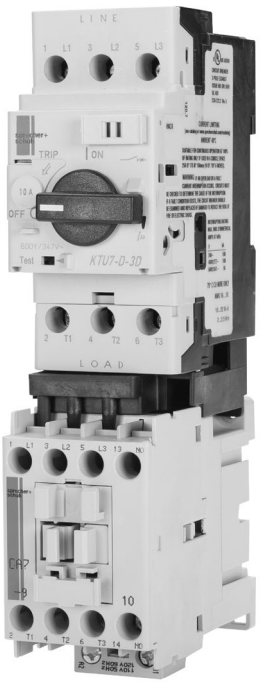

Advantages…

- Small foot print saves panel space, just 45 x 102 x 85 mm, up to 50% smaller than traditional MCCBs.
- Interrupt rating of 65kA at 480Y/277V may allow higher overall panel short circuit rating
- Up to 6 times higher interrupting rating vs. traditional miniature circuit breakers.

Ideal Applications…

- Feeder Circuits for small cabinets, distribution panels, branch circuit protection, transformers and heaters
- Control circuits for control circuit transformers and power supplies
- Industrial Heating applications
- Air conditioning and refrigeration applications

Compare these advanced features

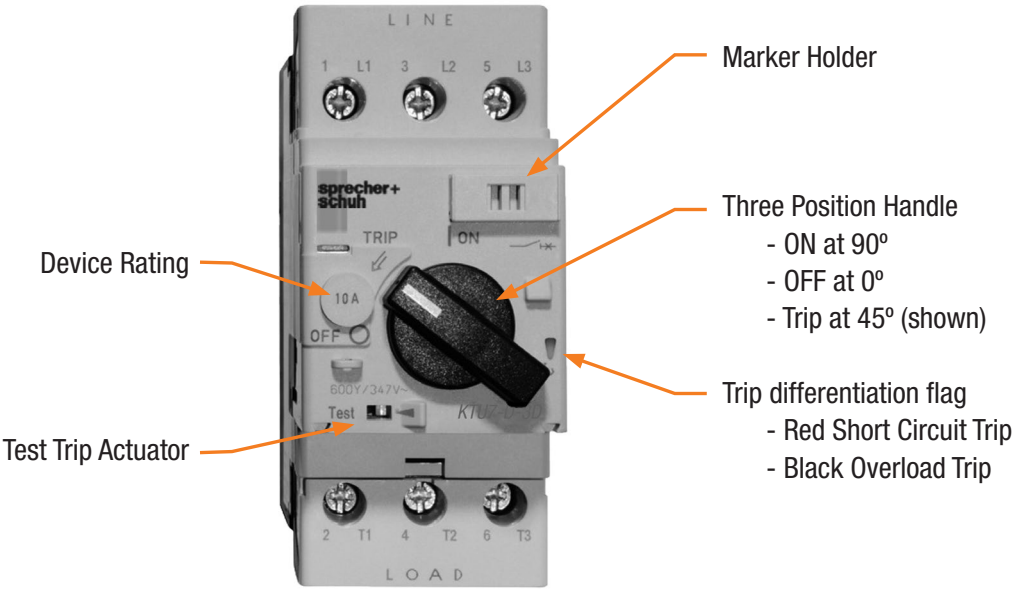

KTU7 Circuit Breaker, Fixed Thermal-Magnetic ❷

Fixed Thermal Current Rating [A]	Magnetic Trip [A]	Interrupting Rating (60Hz) [KA]			Catalog Number	Price
		240V	480Y/277V	600Y/347V		
KTU7-D — High Interrupting Capacity – 2-Pole						
0.5	15…20xIn	100	100	50	**KTU7-D-2D-0.5** ❶	380
1.0	15…20xIn	100	100	50	**KTU7-D-2D-1** ❶	
2.0	15…20xIn	100	100	50	**KTU7-D-2D-2** ❶	
3.0	15…20xIn	100	100	50	**KTU7-D-2D-3** ❶	
4.0	15…20xIn	100	100	50	**KTU7-D-2D-4** ❶	
5.0	15…20xIn	100	100	50	**KTU7-D-2D-5** ❶	
6.0	15…20xIn	100	100	50	**KTU7-D-2D-6** ❶	
8.0	15…20xIn	100	100	50	**KTU7-D-2D-8** ❶	
10.0	15…20xIn	100	100	50	**KTU7-D-2D-10** ❶	
12.0	15…20xIn	65	65	25	**KTU7-D-2D-12**	
15.0	15…20xIn	65	65	25	**KTU7-D-2D-15**	
20.0	15…20xIn	65	65	25	**KTU7-D-2D-20**	
25.0	15…20xIn	65	65	25	**KTU7-D-2D-25**	
30.0	15…20xIn	65	65	25	**KTU7-D-2D-30**	
KTU7-D — High Interrupting Capacity – 3-Pole						
0.5	15…20xIn	100	100	50	**KTU7-D-3D-0.5** ❶	540
1.0	15…20xIn	100	100	50	**KTU7-D-3D-1** ❶	
2.0	15…20xIn	100	100	50	**KTU7-D-3D-2** ❶	
3.0	15…20xIn	100	100	50	**KTU7-D-3D-3** ❶	
4.0	15…20xIn	100	100	50	**KTU7-D-3D-4** ❶	
5.0	15…20xIn	100	100	50	**KTU7-D-3D-5** ❶	
6.0	15…20xIn	100	100	50	**KTU7-D-3D-6** ❶	
8.0	15…20xIn	100	100	50	**KTU7-D-3D-8** ❶	
10.0	15…20xIn	100	100	50	**KTU7-D-3D-10** ❶	
12.0	15…20xIn	65	65	25	**KTU7-D-3D-12**	
15.0	15…20xIn	65	65	25	**KTU7-D-3D-15**	
20.0	15…20xIn	65	65	25	**KTU7-D-3D-20**	
25.0	15…20xIn	65	65	25	**KTU7-D-3D-25**	
30.0	15…20xIn	65	65	25	**KTU7-D-3D-30**	

Description

The KTU7 is a fixed trip, thermal-magnetic UL489 Molded Case Circuit Breaker.

KTU7-D-2D-10

KTU7-D-3D-10

❶ Suitable for continuous operation at 100% of rating only if used in minimum enclosure space of 250 x 175 x 150 mm (10 x 7 x 6 in).
❷ KTU7 has independent thermal elements suitable for power distribution applications (not two slide bar differential tripping).

KT7 Accessories available for KTU7-D

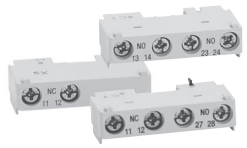	**KT7-PE1 or KT7-PEF1** **Front Mount Auxiliaries and Trip Contacts** See page F10	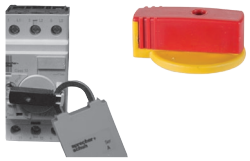	**KT7-KN1, KT7-KRY1 or KT7-DS** **Lockable Twist Knob & Locking Tag** See page F16
	KT7-UA or KT7-AA **Undervoltage Trips and Shunt Trips ❶** See page F14		**Handle Assemblies** **KT7-SY or KT7-SB** **KT7-HTN or KT7-HTRY ❷** See page F15
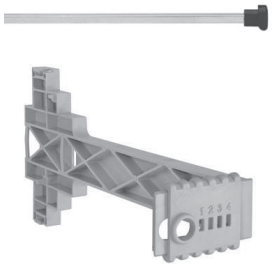	**KT7-HT/HTL, KT7-S_/N_ & KT7-SHS** **Extension Shafts & Support** See page F15	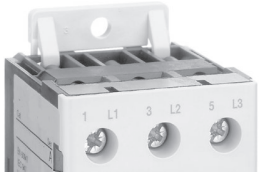	**KT7-45-AS** **Screw Adaptor** See page F16

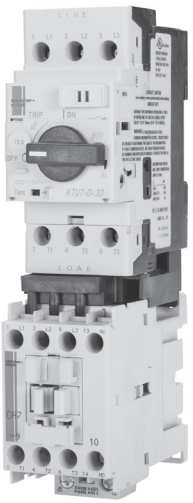

Remote Operation Application
The KTU7 3-Pole unit can be combined with CA7 using Connector Modules to achieve remote operation.
- For CA7-9…23 use KTU7-D-PEC23
- For CA7-9…43 use KTU7-D-PF

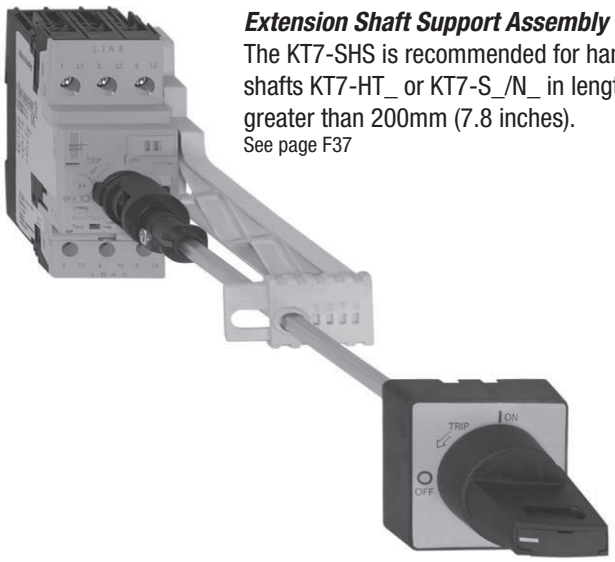

Extension Shaft Support Assembly
The KT7-SHS is recommended for handle shafts KT7-HT_ or KT7-S_/N_ in lengths greater than 200mm (7.8 inches).
See page F37

❶ Series B or later.
❷ Series E or later.

Connecting Modules *(for connecting KTU7 to CA7 AC coil, or CA7 Electronic DC coil contactors)*

Module	Description	For Connecting. . .	To Contactor. . .	Catalog Number	Price
	Connecting Modules • 25 Amp maximum • Provides electrical and mechanical interconnection of KTU7 and CA7 (with AC coils) or CA7-_E (with Electronic DC coils) • Mounts on one DIN rail	KTU7-D	CA7-9..23	**KTU7-D-PEC23** ❶	**56**
	Flexible Connecting Module • 32 Amp maximum • Provides electrical and mechanical interconnection of KTU7 and CA7 (with AC coils) or CA7-_E (with Electronic DC coils) • Mounts on two DIN rails	KTU7-D	CA7-9..43	**KTU7-D-PF** ❶	**56**

Compact Busbar System for KTU7-D

Accessory	Description	For Use With	Catalog Number	Price
	Compact Busbar — 45 mm Spacing (Rated 64 A) • For use with front-mounted auxiliary contact Connects 2-KTU7s Connects 3-KTU7s Connects 4-KTU7s Connects 5-KTU7s (shown)	KTU7-D-3D ❶	**KTU7-D-DB-45-2** **KTU7-D-DB-45-3** **KTU7-D-DB-45-4** **KTU7-D-DB-45-5**	**55** **62** **69** **76**
	Supply Block and Terminal • For power connection to Compact Busbar — 600V, KTU7-D…120A maximum • Top feed — overlaps commoning link • Meets requirements for terminal spacing from source • Compliant with UL489 Terminal Clearance standards	KTU7-D-3D ❶	**KTU7-D-A3E**	**57**
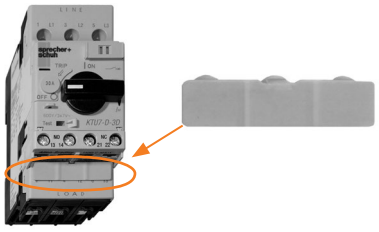	**Load Terminal Cover** • For UL 489 compliance of front mounted auxiliary contacts when installed on KTU7 • The cover packaged in quantities of 10 (must order 10 for one package of 10)	KTU7	**KT7-PEFC**	**6.50**

❶ For use with KTU7 3-pole Circuit Breakers only.

Application Rating Chart

KTU7	High Fault SCCR			Switching Lighting Rated		
	Combined with ❶	480Y/277 VAC (KA)	600Y/347 VAC (KA)	Fluorescent ❷	High-intensity Discharge ❸	HVAC Rated ❹
KTU7-D-2D-0.5	CA7-9…23	65	35	~	HID	HARC
KTU7-D-2D-1	CA7-9…23	65	35	~	HID	HARC
KTU7-D-2D-2	CA7-9…23	65	35	~	HID	HARC
KTU7-D-2D-3	CA7-9…23	65	35	~	HID	HARC
KTU7-D-2D-4	CA7-9…23	65	35	~	HID	HARC
KTU7-D-2D-5	CA7-9…23	65	35	~	HID	HARC
KTU7-D-2D-6	CA7-9…23	65	35	~	HID	HARC
KTU7-D-2D-8	CA7-9…23	65	35	~	HID	HARC
KTU7-D-2D-10	CA7-9…23	65	35	~	HID	HARC
KTU7-D-2D-12	CA7-9…23	65	35	~	HID	HARC
KTU7-D-2D-15	CA7-9…23	65	35	SWD	HID	HARC
KTU7-D-2D-20	CA7-9…23	65	35	SWD	HID	HARC
KTU7-D-2D-25	CA7-9…30	65	35	~	HID	HARC
KTU7-D-2D-30	CA7-9…30	65	35	~	~	HARC
KTU7-D-3D-0.5	CA7-9…23	65	35	~	HID	HARC
KTU7-D-3D-1	CA7-9…23	65	35	~	HID	HARC
KTU7-D-3D-2	CA7-9…23	65	35	~	HID	HARC
KTU7-D-3D-3	CA7-9…23	65	35	~	HID	HARC
KTU7-D-3D-4	CA7-9…23	65	35	~	HID	HARC
KTU7-D-3D-5	CA7-9…23	65	35	~	HID	HARC
KTU7-D-3D-6	CA7-9…23	65	35	~	HID	HARC
KTU7-D-3D-8	CA7-9…23	65	35	~	HID	HARC
KTU7-D-3D-10	CA7-9…23	65	35	~	HID	HARC
KTU7-D-3D-12	CA7-9…23	65	35	~	HID	HARC
KTU7-D-3D-15	CA7-9…23	65	35	~	HID	HARC
KTU7-D-3D-20	CA7-9…23	65	35	~	HID	HARC
KTU7-D-3D-25	CA7-9…30	65	35	~	HID	HARC
KTU7-D-3D-30	CA7-9…30	65	35	~	HID	HARC

IEC Performance Data

(CSA C22.2, UL 489, IEC / EN 60947-1, -2 in connection with a short-circuit protection device

			KTU7-D- 2 pole & 3 pole													
			0.5A	1A	2A	3A	4A	5A	6A	8A	10A	12A	15A	20A	25A	30A
Rated Operational Current I_n		[A]	0.5	1	2	3	4	5	6	8	10	12	15	20	25	30
Fixed Thermal Trip $I_r = I_n$		[A]	0.5	1	2	3	4	5	6	8	10	12	15	20	25	30
Fixed Magnetic Trip $I_m =$		[A]	15…20 x I_n													
Ultimate Short Circuit Breaking Capacity (50 Hz) I_{cu}	230…240V	[kA]	100	100	100	100	100	100	100	100	100	100	100	100	100	100
	400…415V	[kA]	100	100	100	100	100	100	100	100	100	65	65	65	65	65
	525V	[kA]	65	65	65	65	65	65	65	65	65	65	65	65	65	65
	690V	[kA]	50	50	18	18	18	18	18	10	10	10	10	10	10	10
Rated Service Short Circuit Breaking Capacity (50 Hz) I_{cs}	230…240V	[kA]	100	100	100	100	100	100	100	100	100	100	100	100	100	100
	400…415V	[kA]	65	65	65	65	65	65	65	65	65	50	50	50	50	50
	525V	[kA]	65	65	65	65	65	65	65	65	65	50	50	50	25	25
	690V	[kA]	50	50	10	10	10	10	10	6	6	6	6	6	6	6

❶ KTU7 + CA7-9…23 contactor maybe combined with CEP7 overload. SCCR ratings remain unchanged.
❷ KTU7 circuit breaker intended to switch fluorescent lighting on a regular basis. Selection of sizes limited by UL489. Devices marked with "SWD".
❸ KTU7 Circuit Breakers intended to switch high-intensity discharge (ballast) lighting devices marked with "HID".
❹ Rated for use with heating, air conditioning, refrigeration. Devices marked with "HARC".

General Data

		KTU7-D
Number of Poles		2 and 3
Rated Insulation Voltage U_i		
IEC, / EN	[V]	600
UL, CSA	[V]	600
Ratings		HACR
Suitable for continuous operation at 100% of rating only if used in enclosure space for		0.5…15 A, enclosure space 250 x 175 x 150 mm (10 x 7 x 6 in)
Rated Impulse Withstand Voltage U_{imp}		
Pollution degree		3
Main circuits U_{imp} /Overvoltage Category		6 kV/III
Auxiliary circuits U_{imp} /Overvoltage Category		6 kV/III
Safe separation between main and auxiliary circuits		up to 400V
Rated Frequency	[Hz]	50/60
Utilization Category		
• IEC 60947-2 (Circuit Breaker)		A
Life Span		
Mechanical	[operations]	100,000
Electrical (I_e max.)	[operations]	100,000
Switching Frequency	[operations/h]	max. 25
Ambient Temperature		
Storage	[ºC]	-40…+80
Operation	[ºC]	-25…+60 (70 with 15% I_n current reduction)
Resistance to Climatic Change		
Moisture / Heat Resistance	(600068-2-30)	23 ºC / 83 % relative humidity and 40 ºC / 92 % relative humidity, 56 cycles
Dry Heat	(60086-2-2)	100 ºC, relative humidity <50 %, 7 days
Moisture / Change Resistance	(60086-2-3)	40 ºC, relative humidity 93 %, 56 days
Site Altitude	[m]	to 2000 N.N.
Protection Class		IP2X, when wired
Overload Protection		
Phase-loss protection		No phase loss protection
Short circuit protection (Magnetic)		Fixed setting 10…20 x I_n
Main Disconnect Switch Application		Yes, with accessories
Application Conditions		For utilization outside North America, Assemblies (of products) shall comply to the IEC61439-1 requirements KTU7 circuit breakers are intended for use in closed areas without hazardous operating conditions such as dust or explosive or corrosive gases. Enclosures of appropriate manner need to be in place to protect devices in such environments.
Standards		UL489; CSA C22.2 No. 5; IEC / EN 60947-1, -2
Certifications		CE; cULus listed Circuit Breaker, File No. E334037 and E33916 (accessories)

Terminal Specifications

			KTU7-D
Terminal Parts Terminal Type			
Screwdriver			Pozidrive No. 2 / Blade No. 3
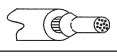	1. conductor	[mm²]/[AWG]	1…6/—
	2. conductor	[mm²]/[AWG]	1…4/—
	1. conductor	[mm²]/[AWG]	1…6/—
	2. conductor	[mm²]/[AWG]	1…6/—
	1. conductor	[mm²]/[AWG]	—/No. 18…10
	2. conductor	[mm²]/[AWG]	—/No. 18…10
	1. conductor	[mm²]/[AWG]	1…6/No. 18…10
	2. conductor	[mm²]/[AWG]	1…6/No. 18…10
Tightening Torque		[N•m]/[lb•in]	2…2.5/18…22
Weight		[g]	395

			KTU7-D-A3E
Use 75 ºC Cu wire only			
Rated Thermal Current I_{th}		[A]	64
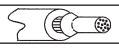	1. conductor	[mm²]/[AWG]	2.5…25/14…4
	1. conductor	[mm²]/[AWG]	2.5…25/14…4
	1. conductor	[mm²]/[AWG]	2.5…25/14…4
	1. conductor	[mm²]/[AWG]	2.5…25/14…4
Tightening Torque		[N•m]/[lb•in]	3…3.5/27…31

Time-Current Characteristic

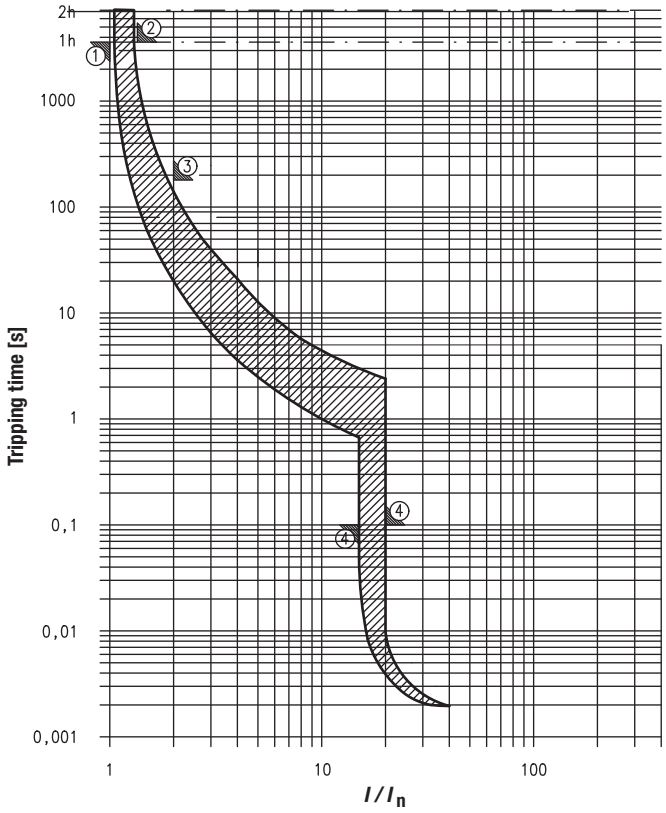

Tripping characteristic acc. to UL 489 and IEC 60947-2

① conventional non-tripping current Int = 1.0 In

② conventional tripping current It = 1.35 In : t = <1h

③ 2.0 In : t = 180s max.

Instantaneous tripping acc. to UL 489 and IEC 60947-2

④ Trip Curve : 15…20 In

Maximum Cut-off (Let-Through) Current

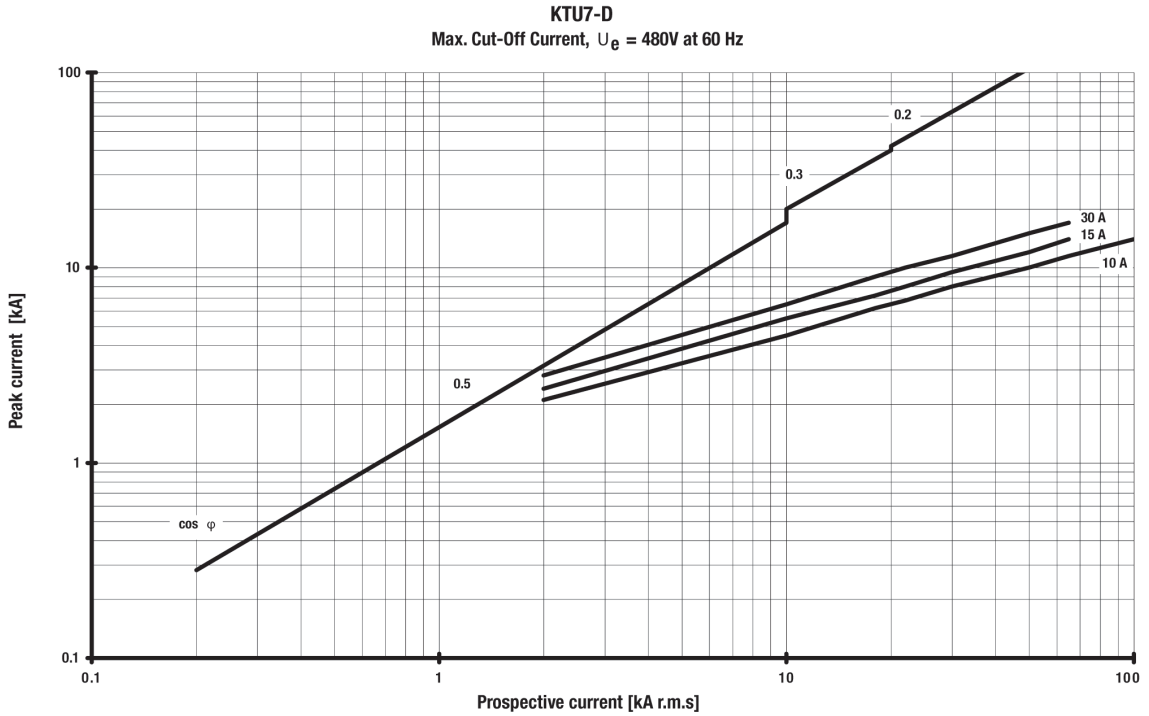

Maximum Let-Through Energy

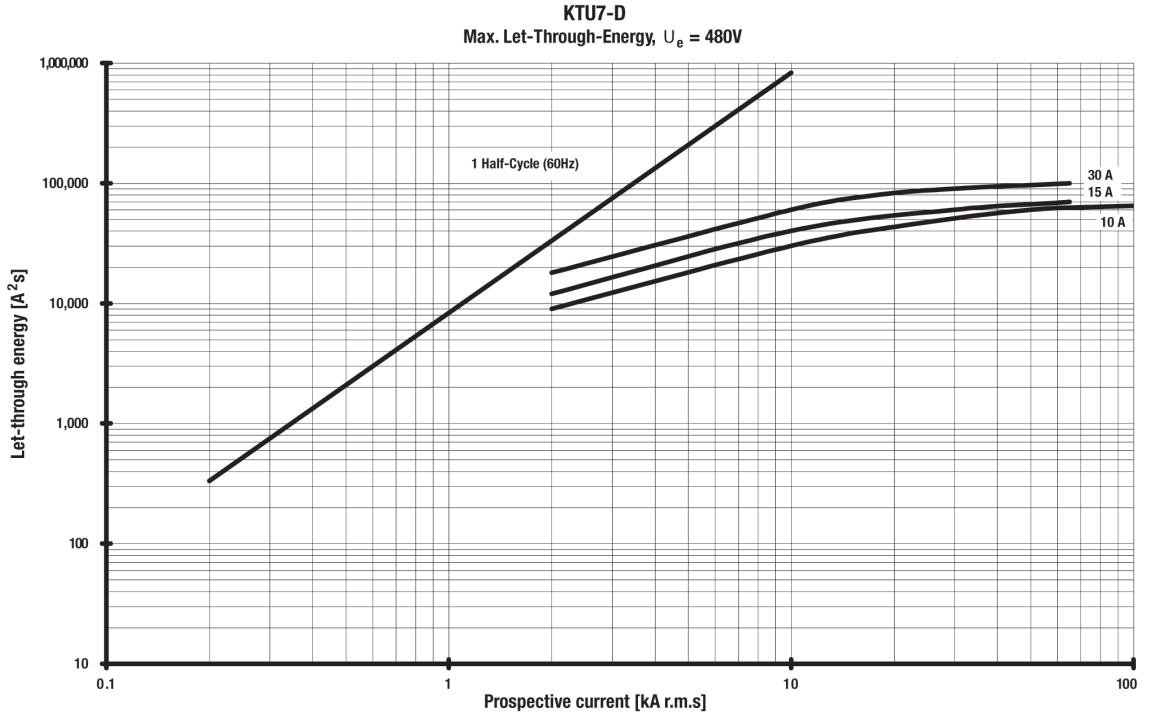

KTU7-D Dimensions

Dimensions are in millimeters (inches). Dimensions not intended for manufacturing purposes.

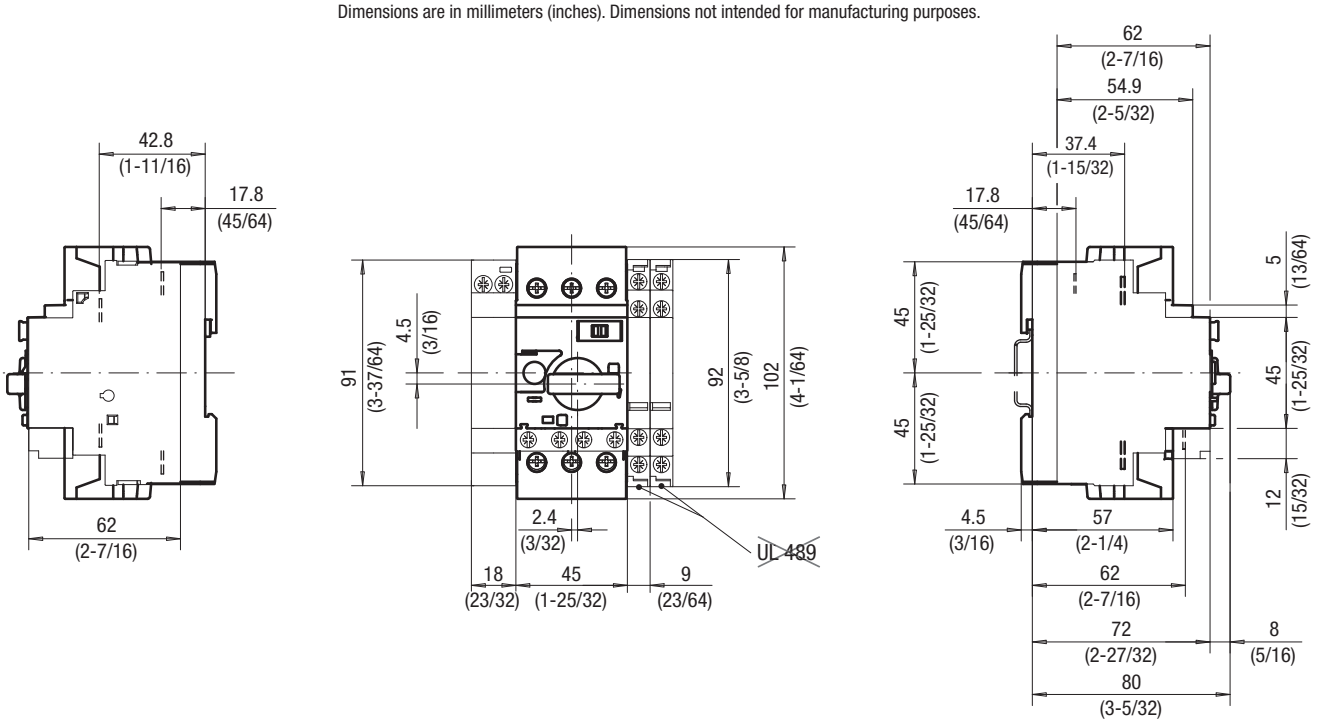

KTU7 Circuit Breaker Enclosure Requirements

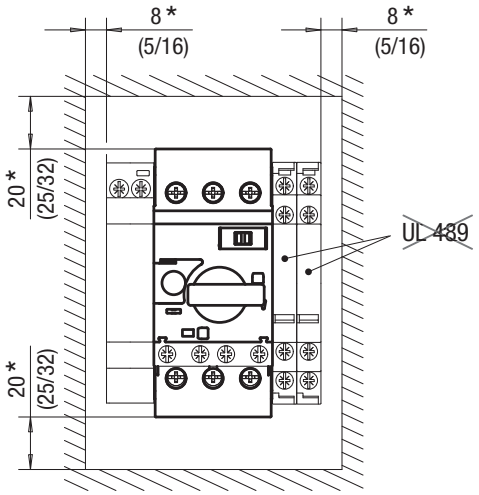

*) - Minimum distance to grounded parts or walls

KTU7 Wiring Diagram

3-Phase
KTU7-D-3

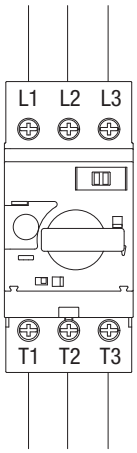

2-Phase
KTU7-D-2

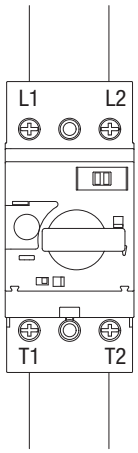

KTU7 with Busbar

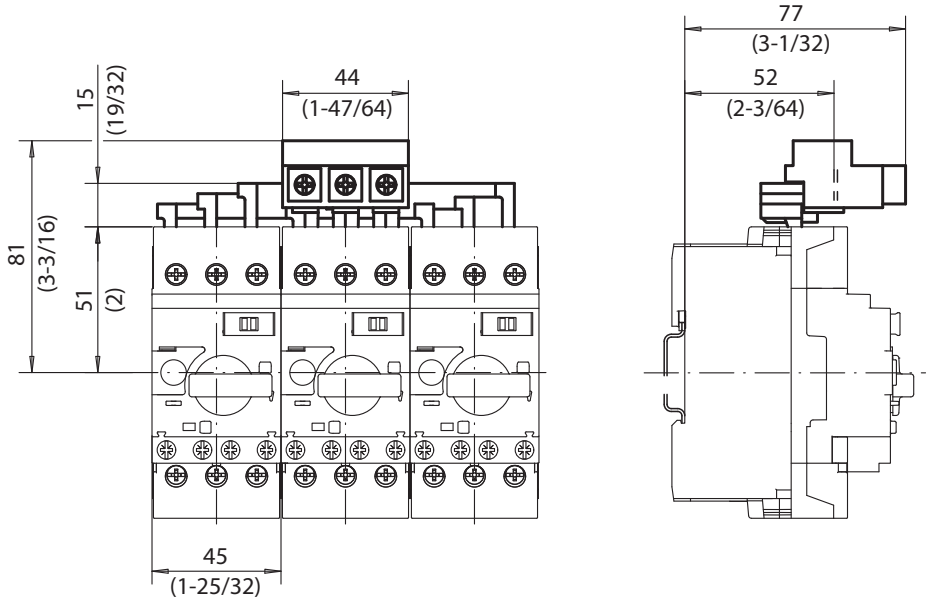

KTU7 with Screw Adaptor KT7-45-AS

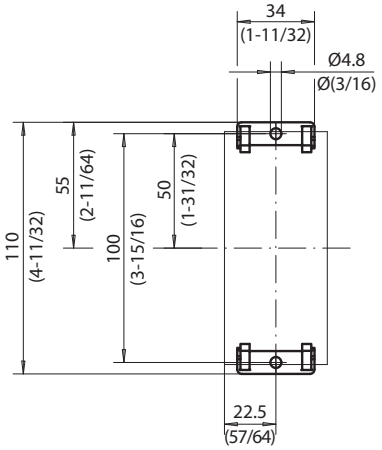

KTU7 Mounting Position

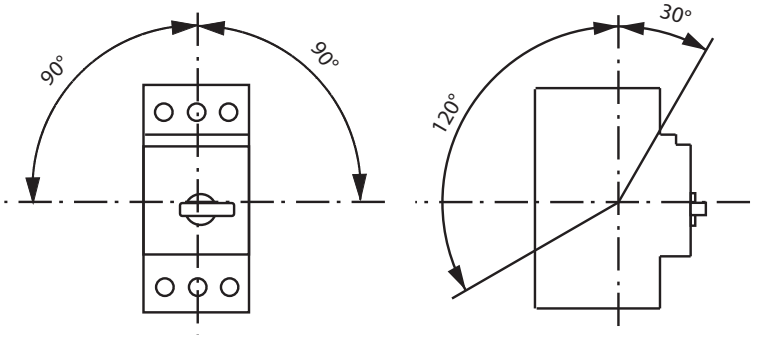

Notes

Ecombo and EcomboPlus Starters

Save space, save money in individual or multi-motor starter applications

See page F121 for
Methods of Applying KT7 Motor Circuit Controllers

Sprecher + Schuh's Ecombo and EcomboPlus starters are the compact alternative to larger and higher priced combination starters. Both models consist of a KTA7 Motor Circuit Controller (cULus listed as a Type E, self-protected combination starter), assembled with a CA7 or CA8 contactor, which provides remote operation (Type E/F). Whether used as a stand-alone starter or in multi-motor starter applications, Ecombo and Ecombo-Plus starters save significant panel space and dollars over conventional combination starter alternatives.

CL7 Ecombo starter

CK7 EcomboPlus starter

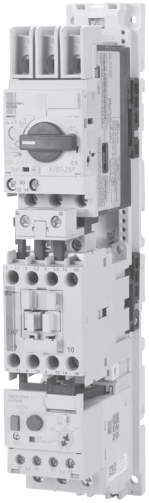

CLT7 Three-Component starter

Control and protection for most industrial applications

The Ecombo starter line covers motors to 45 amperes, while providing current limiting short circuit protection up to 65kA. Class 10 thermal overload protection is also assured with a very accurate current adjustment setting which is factory calibrated to the smallest and largest current the unit can handle. A "differential tripping" mechanism also provides accelerated tripping under single phase conditions (see illustration on page F3). Ecombo starters may be selected as Type 2 Coordinated per IEC 60947-4-1, or UL Construction Type E or F.

The Ecombo starter…

Ecombo starters (CL7) come standard with a KTA7 Motor Circuit Controller connected to Sprecher + Schuh's CA7 contactor (or CA8 mini contactor) through a specially designed connection module. The unit is DIN-rail mounted. Contactor coil connections are at the bottom of the starter to provide attractive and cost effective panel wiring. Ecombo starters may also be purchased with just three parts and assembled by the user to further increase economy. The new CLT7 is a three component starter with a KTB7 controller, CA7 contactor, and a CEP7 solid state overload relay, pre-assembled on a bus bar module and ready to mount to a DIN rail or panel.

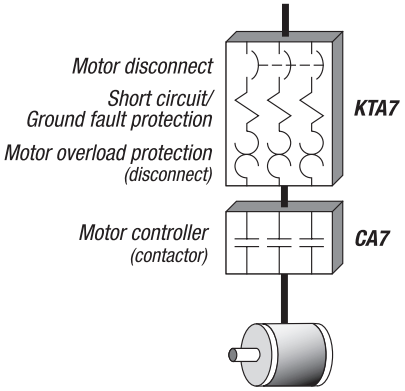

The Ecombo starter line combines a KTA7 self-protected Type E combination controller with a CA7 contactor to form a cost effective compact Type E/F alternative to traditional combination starters.

Ecombo*Plus*… the complete solution

The EcomboPlus starter (CK7) is factory assembled on a special socket base that provides support and allows the starter to be mounted on one or two DIN-rails or screw mounted. Each starter comes standard with a front mounted auxiliary trip contact that is pre-wired to a built-in terminal block at the bottom of the unit. Contactor coil connections are also at the bottom of the starter to provide attractive and cost effective panel wiring.

Reduce panel size, complexity and cost

Because KT7 Motor Circuit Controllers are UL listed as self-protected combination starters, NEC / CEC group motor rules are simplified substantially. In many cases, only a non-fused switch is required for panel disconnect. See "Methods of Applying KT7 Motor Circuit Controllers" in this publication, which explains applying KT7s in multi-motor starter applications.

Starter Type

Ecombo*Plus* Starter with CA7

CK7	*2 component DOL Starter*
CKU7	*2 component REV Starter*

Ecombo Starter with CA7

CL7	*2 component DOL Starter*
CLU7	*2 component REV Starter*
CLT7	*3 component DOL Starter*
CLUT7	*3 component REV Starter*

Ecombo Starter with CA8

CL8	*2 component DOL Starter*
CLU8	*2 component REV Starter*

Contactor Series

Series CA7 ❶

9(E)
12(E)
16(E)
23(E)
30(E)
37(E)
43(E)
60(D)
72(D)
85(D)

Series CA8

9(C)
12(C)

Auxiliary Contact

01	*1 NC*
10	*1 NO*
11	*1 NO + 1 NC*
20	*2 NO*
22	*2 NO + 2 NC*

4-pole CA8 Contactors ❷

-M40	*4 N.O. Power Poles*
-M31	*3 N.O. Power Poles/ 1 N.C. Power Pole*
-M22	*2 N.O. Power Poles/ 2 N.C. Power Poles*

Control Voltage*

Code	AC Voltage
24Z	*24V 50/60Hz*
120	*110V 50Hz / 120V 60Hz*
208	*208V 60Hz*
220W	*208…240V 60Hz*
277	*240V 50Hz / 277V 60Hz*
380	*380…400V 50Hz / 440V 60Hz*
480	*440V 50Hz / 480V 60Hz*
600	*550V 50Hz / 600V 60Hz*

Code	DC Voltage
12D(E)	*12V*
24D(E)	*24V*
48D(E)	*48V*
110D(E)	*110V*
220D(E)	*220V*

** Other control voltages available*
(E) designates Electronic DC Coils

This illustration is for reference only.

CL7 - 9 - 10 - 24Z - AS 0.25A - A01

Turn to the appropriate page to determine specific catalog number & pricing.

Circuit Breaker Type

KT..7

A…	*Motor Protection*
B…	*Starter Protection*
C…	*High Inrush Protection*
…S	*Standard Performance*
…H	*High Performance*

Adj. Range

0.16A	*0.1…0.16A*
0.25A	*0.16…0.25A*
0.4A	*0.25…0.4A*
0.63A	*0.4…0.63A*
1.0A	*0.63…1.0A*
1.6A	*1.0…1.6A*
2.5A	*1.6…2.5A*
4.0A	*2.5…4.0A*
6.3A	*4.0…6.3A*
10A	*6.3…10A*
16A	*10…16A*
20A	*16…20A*
25A	*20…25A*
32A	*25…32A*
45A	*32…45A*

Auxiliaries + Trip Contacts

X	*No auxiliary contacts*
Front Mounted Auxiliaries	
A10	*Aux. Contact 1 NO*
A01	*Aux. Contact 1 NC*
A11	*Aux. Contact 1 NO + 1 NC*
A20	*Aux. Contact 2 NO*
T10A01	*1 NO Short Circuit or Overload + 1 NC Aux. Contact*
T10A10	*1 NO Short Circuit or Overload + 1 NO Aux. Contact*
Side Mounted Auxiliaries	
AS11	*Aux. Contact 1 NO + 1 NC*
AS20	*Aux. Contact 2 NO*
R10	*1 NC Short Circuit or Overload + 1 NO Aux. Contact*
R11	*1 NC Short Circuit or Overload + 1 NC Aux. Contact*

Option(s)

For complete listing of **Option Codes,** refer to Modifications page in this section.

❶ (D & E) designations indicate DC coil.
❷ On four pole contactors, this number designates main power pole configuration.

Non-Reversing Ecombo Starters with AC Coil, Series CA8 Contactor

Thermal Trip [A]	Magnetic Trip [A]	Index ❶	Typical Three Phase [HP] 200V	230V	460V	575V	Catalog Number ❷	Price
0.10...0.16	2.1	1M	~	~	~	~	**CL8-09-10-✱-AS0.16A-X**	**390**
0.16...0.25	3.3	2M	~	~	~	~	**CL8-09-10-✱-AS0.25A-X**	**390**
0.25...0.40	5.2	3M	~	~	~	~	**CL8-09-10-✱-AS0.4A-X**	**390**
0.40...0.63	8.2	4M	~	~	~	~	**CL8-09-10-✱-AS0.63A-X**	**420**
0.63...1	13	5M	~	~	~	1/2	**CL8-09-10-✱-AS1.0A-X**	**420**
1...1.6	21	6M	~	~	1/2	3/4	**CL8-09-10-✱-AS1.6A-X**	**420**
1.6...2.5	33	7M	1/2	1/2	1	1-1/2	**CL8-09-10-✱-AS2.5A-X**	**420**
2.5...4	52	8M	3/4	3/4	2	3	**CL8-09-10-✱-AS4.0A-X**	**420**
4...6.3	82	9M	1	1-1/2	3	~	**CL8-09-10-✱-AS6.3A-X**	**425**
6.3...10	130	10M	2	2	5	~	**CL8-09-10-✱-AS10A-X**	**425**
6.3…10	130	11M	~	3	~	~	**CL8-12-10-✱-AS10A-X**	**500**
10…16	208	12M	3	~	7-1/2	~	**CL8-12-10-✱-AS16A-X**	**500**

Includes:

- KTA7-25S (Standard Interrupting Capacity) Motor Controller
- CA8 Contactor
- Connecting Module (Cat.# KT7-25S-PEK12)
- Terminal Adaptor for Type F Applications (Cat.# KT7-25-TE1)
- Can mount on one DIN-rail

Non-Reversing Ecombo Starters with DC Coil, Series CA8 Contactor

Thermal Trip [A]	Magnetic Trip [A]	Index ❶	Typical Three Phase [HP] 200V	230V	460V	575V	Catalog Number ❷	Price
0.10...0.16	2.1	1M	~	~	~	~	**CL8-09C-10-✱-AS0.16A-X**	**420**
0.16...0.25	3.3	2M	~	~	~	~	**CL8-09C-10-✱-AS0.25A-X**	**420**
0.25...0.40	5.2	3M	~	~	~	~	**CL8-09C-10-✱-AS0.4A-X**	**420**
0.40...0.63	8.2	4M	~	~	~	~	**CL8-09C-10-✱-AS0.63A-X**	**450**
0.63...1	13	5M	~	~	~	1/2	**CL8-09C-10-✱-AS1.0A-X**	**450**
1...1.6	21	6M	~	~	1/2	3/4	**CL8-09C-10-✱-AS1.6A-X**	**450**
1.6...2.5	33	7M	1/2	1/2	1	1-1/2	**CL8-09C-10-✱-AS2.5A-X**	**450**
2.5...4	52	8M	3/4	3/4	2	3	**CL8-09C-10-✱-AS4.0A-X**	**450**
4...6.3	82	9M	1	1-1/2	3	~	**CL8-09C-10-✱-AS6.3A-X**	**470**
6.3...10	130	10M	2	2	5	~	**CL8-09C-10-✱-AS10A-X**	**470**
6.3…10	130	11M	~	3	~	~	**CL8-12C-10-✱-AS10A-X**	**525**
10…16	208	12M	3	~	7-1/2	~	**CL8-12C-10-✱-AS16A-X**	**525**

AC Coil Codes ❸

AC Coil Code	Voltage Range 50 Hz	60 Hz
12	12V	12V
24Z	**24V**	**24V**
48Z	48V	48V
120	**110V**	**120V**
208	200V-220V	200V-220V
240	240V	240V
380 ❺	Use Coil Code 400	
400 ❺	400V	400V
480	**440V**	**480V**
575 ❻	Use Coil Code 600	
600 ❻	525V	600V

DC Coil Codes ❸

DC Coil Code	Voltage
12D	12V
24D	**24V ❹**
110D	110V
125D	125V
220D	220V

Horsepower ratings shown in the tables are for reference only. *The final selection of the manual starter depends on the actual motor full load current and service factor.*

- *For motor with service factor less than 1.15.* Use motor nameplate full load current times 0.9 and choose the motor starter with the appropriate current range. Example: Motor F.L.C. = 4.2A; S.F. = 1.0. – 4.2A x 0.9 = 3.78A. Select Catalog Number KTA7-25S-4.0A.

Ordering Instructions

Specify Catalog Number	
Replace (✱) with Coil Code	**See Coil Code table on this page for codes.**

❶ KAIC Assembly Rating Index. See pages F73-F75 for Application Rating Guide.
❷ Does not include auxiliary contacts. See Factory Options on page F69 for additional auxiliary contact configurations.
❸ The coil codes shown are the most commonly stocked items. Contact your Sprecher + Schuh representative to determine if special voltages, are required.
❹ Integrated surge suppressor for coil is available.
❺ The European Community has agreed that 400V is the nominal voltage in lieu of 380V. Use this code when 380V is required.
❻ Use this code for 575V applications.

Reversing Ecombo Starters with AC Coil, Series CA8 Contactor

Thermal Trip [A]	Magnetic Trip [A]	Index ❶	Typical Three Phase [HP]				Catalog Number ❷	Price
			200V	230V	460V	575V		
0.10...0.16	2.1	1M	~	~	~	~	CLU8-09-02-✱-AS0.16A-X	560
0.16...0.25	3.3	2M	~	~	~	~	CLU8-09-02-✱-AS0.25A-X	560
0.25...0.40	5.2	3M	~	~	~	~	CLU8-09-02-✱-AS0.4A-X	560
0.40...0.63	8.2	4M	~	~	~	~	CLU8-09-02-✱-AS0.63A-X	600
0.63...1	13	5M	~	~	~	1/2	CLU8-09-02-✱-AS1.0A-X	600
1...1.6	21	6M	~	~	1/2	3/4	CLU8-09-02-✱-AS1.6A-X	600
1.6...2.5	33	7M	1/2	1/2	1	1-1/2	CLU8-09-02-✱-AS2.5A-X	600
2.5...4	52	8M	3/4	3/4	2	3	CLU8-09-02-✱-AS4.0A-X	600
4...6.3	82	9M	1	1-1/2	3	~	CLU8-09-02-✱-AS6.3A-X	630
6.3...10	130	10M	2	2	5	~	CLU8-09-02-✱-AS10A-X	630
6.3...10	130	11M	~	3	~	~	CLU8-12-02-✱-AS10A-X	720
10…16	208	12M	3	~	7-1/2	~	CLU8-12-02-✱-AS16A-X	720

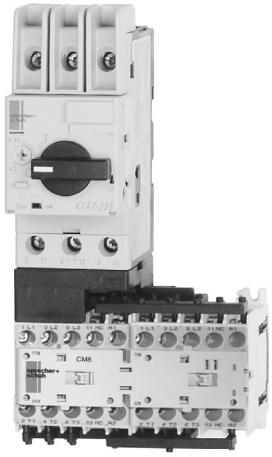

Reversing Ecombo Starters with DC Coil, Series CA8 Contactor

Thermal Trip [A]	Magnetic Trip [A]	Index ❶	Typical Three Phase [HP]				Catalog Number ❷	Price
			200V	230V	460V	575V		
0.10...0.16	2.1	1M	~	~	~	~	CLU8-09C-02-✱-AS0.16A-X	590
0.16...0.25	3.3	2M	~	~	~	~	CLU8-09C-02-✱-AS0.25A-X	590
0.25...0.40	5.2	3M	~	~	~	~	CLU8-09C-02-✱-AS0.4A-X	590
0.40...0.63	8.2	4M	~	~	~	~	CLU8-09C-02-✱-AS0.63A-X	630
0.63...1	13	5M	~	~	~	1/2	CLU8-09C-02-✱-AS1.0A-X	630
1...1.6	21	6M	~	~	1/2	3/4	CLU8-09C-02-✱-AS1.6A-X	630
1.6...2.5	33	7M	1/2	1/2	1	1-1/2	CLU8-09C-02-✱-AS2.5A-X	630
2.5...4	52	8M	3/4	3/4	2	3	CLU8-09C-02-✱-AS4.0A-X	630
4...6.3	82	9M	1	1-1/2	3	~	CLU8-09C-02-✱-AS6.3A-X	660
6.3...10	130	10M	2	2	5	~	CLU8-09C-02-✱-AS10A-X	660
6.3...10	130	11M	~	3	~	~	CLU8-12C-02-✱-AS10A-X	750
10…16	208	12M	3	~	7-1/2	~	CLU8-12C-02-✱-AS16A-X	750

Includes:

- KTA7-25S (Standard Interrupting Capacity) Motor Controller
- One Reversing CAU8 Contactor with Mechanical Interlock (CM8)
- Connecting Module (Cat.# KT7-25S-PEK12)
- Terminal Adaptor for Type F Applications (Cat.# KT7-25-TE1)
- Reversing Power Wiring Kit (Cat.# CAUT8-PW)
- Can mount on one DIN-rail

AC Coil Codes ❸

AC Coil Code	Voltage Range	
	50 Hz	60 Hz
12	12V	12V
24Z	24V	24V
48Z	48V	48V
120	110V	120V
208	200V-220V	200V-220V
240	240V	240V
380 ❺	Use Coil Code 400	
400 ❺	400V	400V
480	440V	480V
575 ❻	Use Coil Code 600	
600 ❻	525V	600V

DC Coil Codes ❸

DC Coil Code	Voltage
12D	12V
24D	24V ❹
110D	110V
125D	125V
220D	220V

Horsepower ratings shown in the tables are for reference only. *The final selection of the manual starter depends on the actual motor full load current and service factor.*

- *For motor with service factor less than 1.15.* Use motor nameplate full load current times 0.9 and choose the motor starter with the appropriate current range. Example: Motor F.L.C. = 4.2A; S.F. = 1.0. – 4.2A x 0.9 = 3.78A. Select Catalog Number KTA7-25S-4.0A.

Ordering Instructions

Specify Catalog Number	
Replace (✱) with Coil Code	**See Coil Code table on this page for codes.**

❶ KAIC Assembly Rating Index. See pages F73-F75 for Application Rating Guide.
❷ Does not include auxiliary contacts. See Factory Options on page F69 for additional auxiliary contact configurations.
❸ The coil codes shown are the most commonly stocked items. Contact your Sprecher + Schuh representative to determine if special voltages, are required.
❹ Integrated surge suppressor for coil is available.
❺ The European Community has agreed that 400V is the nominal voltage in lieu of 380V. Use this code when 380V is required.
❻ Use this code for 575V applications.

Non-Reversing Ecombo Starters with AC Coil, Series CA7 Contactor ❸

Thermal Trip [A]	Magnetic Trip [A]	Index ❶	Typical Three Phase [HP] 200V	230V	460V	575V	Catalog Number ❷❻	Price
KTA7-25S — Standard Interrupting Capacity								
0.10...0.16	2.1	1	~	~	~	~	**CL7-9-10-✱-AS0.16A-A10**	**427**
0.16...0.25	3.3	2	~	~	~	~	**CL7-9-10-✱-AS0.25A-A10**	**427**
0.25...0.40	5.2	3	~	~	~	~	**CL7-9-10-✱-AS0.4A-A10**	**427**
0.40...0.63	8.2	4	~	~	~	~	**CL7-9-10-✱-AS0.63A-A10**	**461**
0.63...1	13	5	~	~	~	1/2	**CL7-9-10-✱-AS1.0A-A10**	**461**
1...1.6	21	6	~	~	1/2	3/4	**CL7-9-10-✱-AS1.6A-A10**	**461**
1.6...2.5	33	7	1/2	1/2	1	1-1/2	**CL7-9-10-✱-AS2.5A-A10**	**461**
2.5...4	52	8	3/4	3/4	2	3	**CL7-9-10-✱-AS4.0A-A10**	**461**
4...6.3	82	9	1	1-1/2	3	5 ❺	**CL7-9-10-✱-AS6.3A-A10 ❺**	**461**
6.3...10	130	11	2	3	5	7-1/2 ❺	**CL7-12-10-✱-AS10A-A10 ❺**	**490**
10...16	208	12	3	5	10	10 ❺	**CL7-16-10-✱-AS16A-A10 ❺**	**550**
14.5...20	260	15	5	5	10	15 ❺	**CL7-23-10-✱-AS20A-A10 ❺**	**570**
18.5...25	325	16	5 ❺	7-1/2 ❺	15 ❺	20 ❺	**CL7-23-10-✱-AS25A-A10 ❺**	**570**
KTA7-25H — High Interrupting Capacity								
1.6...2.5	33	17	1/2	1/2	1	1-1/2	**CL7-9-10-✱-AH2.5A-A10**	**524**
2.5...4	52	19	3/4	3/4	2	3	**CL7-9-10-✱-AH4.0A-A10**	**524**
4...6.3	82	22	1	1-1/2	3	5	**CL7-9-10-✱-AH6.3A-A10**	**524**
6.3...10	130	24	2	3	5	7-1/2	**CL7-12-10-✱-AH10A-A10**	**560**
10...16	208	28	3	5	10	10	**CL7-16-10-✱-AH16A-A10**	**620**
14.5...20	260	31	5	5	10	15 ❺	**CL7-23-10-✱-AH20A-A10 ❺**	**640**
18...25	325	33	5	7-1/2	15	20 ❺	**CL7-23-10-✱-AH25A-A10 ❺**	**640**
KTA7-45H — High Interrupting Capacity ❸								
6.3…10	130	36	2	3	5	7-1/2	**CL7-30-10-✱-AH10A-A10-W**	**895**
10…16	208	37	3	5	10	10	**CL7-30-10-✱-AH16A-A10-W**	**895**
14.5…20	260	38	5	5	10	15	**CL7-30-10-✱-AH20A-A10-W**	**895**
18…25	325	39	7-1/2	7-1/2	15	20	**CL7-30-10-✱-AH25A-A10-W**	**895**
23...32	416	41	7-1/2	10	20	25	**CL7-30-10-✱-AH32A-A10-W**	**954**
32…45	585	45	10	10	25	30	**CL7-37-10-✱-AH45A-A10-W**	**1016**
32…45	585	46	10	15	30	30	**CL7-43-11-✱-AH45A-A10-W ❹**	**1040**

For applications above 45 amps please consider open type combination starters on page C53.1.

CL7-23-10-120-AS25A-A10

Includes:

- KT7 Motor Controller with 1 NO Auxiliary Contact
- CA7 Contactor (AC)
- Connecting Module (Cat.# KT7-25[S or H]-PEC23)
- Terminal Adaptor for Type E/F Applications
- Can mount on one DIN-rail

Optional: ❸

- Type W Mounting Module is optional on 25S & 25H. Type W Module is standard on 45H models. See modifications on page F69.

Coil Codes (✱) ❷

AC Coil Code	Voltage Range 50 Hz	60 Hz
24Z	24V	24V
120	**110V**	**120V**
208	~	208V
220W	**200V-220V**	**208V-240V**
240	220V	240V
277	240V	277V
380 ❻	380...400V	440V
480 ❻	**440V**	**480V**
600 ❻	550V	600V

Horsepower ratings shown in the tables are for reference only. *The final selection of the manual starter depends on the actual motor full load current and service factor.*

- *For motor with service factor less than 1.15.* Use motor nameplate full load current times 0.9 and choose the motor starter with the appropriate current range. Example: Motor F.L.C. = 4.2A; S.F. = 1.0. – 4.2A x 0.9 = 3.78A.
  Select Catalog Number KTA7-25S-4.0A.

❶ KAIC Assembly Rating Index. See pages F73-F75 for Application Rating Guide.
❷ Other voltages available, see Section A in this catalog. *Non-standard coil voltages not listed here must be ordered and installed separately as renewal parts.*
❸ CL7-30…43 with KTA7-45H include Type W Mounting Modules for 35mm or 70mm DIN rail or Panel Mounting as necessary from page F17. To add Type W Mounting Modules for 25S or 25H models add **-W** to end of catalog number. See page F69 for modifications.
❹ CL7-43 supplied with (1) NO and (1) NC front mount auxiliary.
❺ Catalog numbers and/or specific voltages (i.e. @ 575V) shaded in gray are suitable for Group Installation, per NEC 430-53C, because they are not Type E/F rated. See page F73 for ratings.
❻ Suffix –A10 uses front-mount KT7-PE1-10 300 VAC maximum control circuit. For control circuits greater than 300 VAC use side-mount KT7-PA1-11 and change suffix –A10 to –AS11 (example CL7-9-10-✱-AS0.16A-**AS11**) Add $65 or see options on page F69.

Ordering Instructions

Specify Catalog Number	
Replace (✱) with Coil Code	**See Coil Code table on this page for codes.**

Non-Reversing Ecombo Starters with Electronic DC Coil, Series CA7 Contactor ❸

Thermal Trip [A]	Magnetic Trip [A]	Index ❶	Typical Three Phase [HP] 200V	230V	460V	575V	Catalog Number ❷	Price
KTA7-25S — Standard Interrupting Capacity								
0.10...0.16	2.1	1	~	~	~	~	CL7-9E-10-✱-AS0.16A-A10	500
0.16...0.25	3.3	2	~	~	~	~	CL7-9E-10-✱-AS0.25A-A10	500
0.25...0.40	5.2	3	~	~	~	~	CL7-9E-10-✱-AS0.4A-A10	500
0.40...0.63	8.2	4	~	~	~	~	CL7-9E-10-✱-AS0.63A-A10	535
0.63...1	13	5	~	~	~	1/2	CL7-9E-10-✱-AS1.0A-A10	535
1...1.6	21	6	~	~	1/2	3/4	CL7-9E-10-✱-AS1.6A-A10	535
1.6...2.5	33	7	1/2	1/2	1	1-1/2	CL7-9E-10-✱-AS2.5A-A10	535
2.5...4	52	8	3/4	3/4	2	3	CL7-9E-10-✱-AS4.0A-A10	535
4...6.3	82	9	1	1-1/2	3	5 ❻	CL7-9E-10-✱-AS6.3A-A10 ❻	535
6.3...10	130	11	2	3	5	7-1/2 ❻	CL7-12E-10-✱-AS10A-A10 ❻	565
10...16	208	12	3	5	10	10 ❻	CL7-16E-10-✱-AS16A-A10 ❻	635
14.5...20	260	15	5	5	10	15 ❻	CL7-23E-10-✱-AS20A-A10 ❻	660
18.5...25	325	16	5 ❻	7-1/2 ❻	15 ❻	20 ❻	CL7-23E-10-✱-AS25A-A10 ❻	660
KTA7-25H — High Interrupting Capacity								
1.6...2.5	33	17	1/2	1/2	1	1-1/2	CL7-9E-10-✱-AH2.5A-A10	600
2.5...4	52	19	3/4	3/4	2	3	CL7-9E-10-✱-AH4.0A-A10	600
4...6.3	82	22	1	1-1/2	3	5	CL7-9E-10-✱-AH6.3A-A10	600
6.3...10	130	24	2	3	5	7-1/2	CL7-12E-10-✱-AH10A-A10	630
10...16	208	28	3	5	10	10	CL7-16E-10-✱-AH16A-A10	705
14.5...20	260	31	5	5	10	15 ❻	CL7-23E-10-✱-AH20A-A10 ❻	725
18...25	325	33	5	7-1/2	15	20 ❻	CL7-23E-10-✱-AH25A-A10 ❻	725
KTA7-45H — High Interrupting Capacity ❹								
6.3…10	130	36	2	3	5	7-1/2	CL7-30E-10-✱-AH10A-A10-W	1005
10…16	208	37	3	5	10	10	CL7-30E-10-✱-AH16A-A10-W	1005
14.5…20	260	38	5	5	10	15	CL7-30E-10-✱-AH20A-A10-W	1005
18…25	325	39	7-1/2	7-1/2	15	20	CL7-30E-10-✱-AH25A-A10-W	1005
23...32	416	41	7-1/2	10	20	25	CL7-30E-10-✱-AH32A-A10-W	1064
32…45	585	45	10	10	25	30	CL7-37E-10-✱-AH45A-A10-W	1142
32…45	585	46	10	15	30	30	CL7-43E-11-✱-AH45A-A10-W ❺	1207

For applications above 45 amps please consider open type combination starters on page C53.1.

CL7-23E-10-24E-AS25A-A10

Includes:

- KT7 Motor Controller with 1 NO Auxiliary Contact
- CA7-9E...43E Contactor
- Connecting Module (Cat.# KT7-25[S or H]-PEC23)
- Terminal Adaptor for Type E/F Applications
- Can mount on one DIN-rail

Optional: ❸

- Type W Mounting Module is optional on 25S & 25H. Type W Module is standard on 45H models. See modifications on page F69.

Coil Codes ❷

DC Coil Codes	Voltage
12E	12V
24E	**24V**
36E	36-48V
48E	48-72V
110E	110-125V
220E	220-250V

Horsepower ratings shown in the tables are for reference only.
The final selection of the manual starter depends on the actual motor full load current and service factor.

- *For motor with service factor less than 1.15.* Use motor nameplate full load current times 0.9 and choose the motor starter with the appropriate current range. Example: Motor F.L.C. = 4.2A; S.F. = 1.0. – 4.2A x 0.9 = 3.78A. Select Catalog Number KTA7-25S-4.0A.

❶ KAIC Assembly Rating Index. See pages F73-F75 for Application Rating Guide.
❷ CL7-9E…43E with electronic coils are not interchangeable with non-electronic DC or AC coils.
❸ See Section A for limitations on adding auxiliaries to Electronic DC Coil contacts.
❹ CL7-30E…43E with KTA7-45H include Type W Mounting Modules for 35mm or 70mm DIN rail or Panel Mounting as necessary from page F17. To add Type W Mounting Modules for 25S or 25H models add **-W** to end of catalog number. See page F69 for modifications.
❺ CL7-43E supplied with (1) NO and (1) NC front mount auxiliary.
❻ Catalog numbers and/or specific voltages (i.e. @ 575V) shaded in gray are suitable for Group Installation, per NEC 430-53C, because they are not Type E/F rated. See page F73 for ratings.

Ordering Instructions

Specify Catalog Number	
Replace (✱) with Coil Code	**See Coil Code table on this page for codes.**

Reversing Ecombo Starters with AC Coil, Series CA7 Contactor ❸

Thermal Trip [A]	Magnetic Trip [A]	Index ❶	Typical Three Phase [HP] 200V	230V	460V	575V	Catalog Number ❷❻	Price
KTA7-25S — Standard Interrupting Capacity								
0.10...0.16	2.1	1	~	~	~	~	**CLU7-9-22-✱-AS0.16A-A10**	**647**
0.16...0.25	3.3	2	~	~	~	~	**CLU7-9-22-✱-AS0.25A-A10**	**647**
0.25...0.40	5.2	3	~	~	~	~	**CLU7-9-22-✱-AS0.4A-A10**	**647**
0.40...0.63	8.2	4	~	~	~	~	**CLU7-9-22-✱-AS0.63A-A10**	**680**
0.63...1	13	5	~	~	~	1/2	**CLU7-9-22-✱-AS1.0A-A10**	**680**
1...1.6	21	6	~	~	1/2	3/4	**CLU7-9-22-✱-AS1.6A-A10**	**680**
1.6...2.5	33	7	1/2	1/2	1	1-1/2	**CLU7-9-22-✱-AS2.5A-A10**	**680**
2.5...4	52	8	3/4	3/4	2	3	**CLU7-9-22-✱-AS4.0A-A10**	**680**
4...6.3	82	9	1	1-1/2	3	5 ❺	**CLU7-9-22-✱-AS6.3A-A10 ❺**	**680**
6.3...10	130	11	2	3	5	7-1/2 ❺	**CLU7-12-22-✱-AS10A-A10 ❺**	**760**
10...16	208	12	3	5	10	10 ❺	**CLU7-16-22-✱-AS16A-A10 ❺**	**821**
14.5...20	260	15	5	5	10	15 ❺	**CLU7-23-22-✱-AS20A-A10 ❺**	**863**
18.5...25	325	16	5 ❺	7-1/2 ❺	15 ❺	20 ❺	**CLU7-23-22-✱-AS25A-A10 ❺**	**863**
KTA7-25H — High Interrupting Capacity								
1.6...2.5	33	17	1/2	1/2	1	1-1/2	**CLU7-9-22-✱-AH2.5A-A10**	**742**
2.5...4	52	19	3/4	3/4	2	3	**CLU7-9-22-✱-AH4.0A-A10**	**742**
4...6.3	82	22	1	1-1/2	3	5	**CLU7-9-22-✱-AH6.3A-A10**	**742**
6.3...10	130	24	2	3	5	7-1/2	**CLU7-12-22-✱-AH10A-A10**	**850**
10...16	208	28	3	5	10	10	**CLU7-16-22-✱-AH16A-A10**	**893**
14.5...20	260	31	5	5	10	15 ❺	**CLU7-23-22-✱-AH20A-A10 ❺**	**935**
18...25	325	33	5	7-1/2	15	20 ❺	**CLU7-23-22-✱-AH25A-A10 ❺**	**935**
KTA7-45H — High Interrupting Capacity ❸								
6.3…10	130	36	2	3	5	7-1/2	**CLU7-30-22-✱-AH10A-A10-W**	**1075**
10…16	208	37	3	5	10	10	**CLU7-30-22-✱-AH16A-A10-W**	**1075**
14.5…20	260	38	5	5	10	15	**CLU7-30-22-✱-AH20A-A10-W**	**1075**
18…25	325	39	7-1/2	7-1/2	15	20	**CLU7-30-22-✱-AH25A-A10-W**	**1075**
23...32	416	41	7-1/2	10	20	25	**CLU7-30-22-✱-AH32A-A10-W**	**1175**
32…45	585	45	10	10	25	30	**CLU7-37-22-✱-AH45A-A10-W**	**1240**
32…45	585	46	10	15	30	30	**CLU7-43-22-✱-AH45A-A10-W ❹**	**1310**

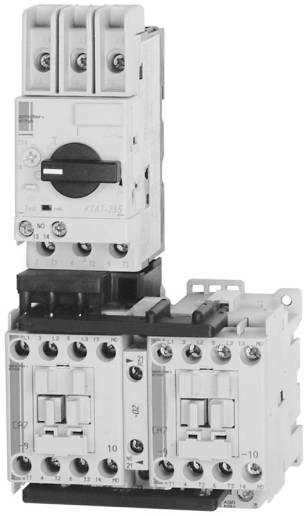

CLU7-9-22-120-AS25A-A10

Includes:

- KT7 Motor Controller with 1 NO Auxiliary Contact
- Two CA7 Contactors (AC)
- Connecting Module (Cat.# KT7-25[S or H]-PEC23)
- Terminal Adaptor for Type E/F Applications
- Reversing Power Wiring Kit (Cat.# CAUT7-PW23)
- Electrical / Mechanical Interlock
- Can mount on one DIN-rail

Optional: ❸

- Type W Mounting Module is optional on 25S & 25H. Type W Module is standard on 45H models. See modifications on page F69.

Coil Codes (✱) ❷

AC Coil Code	Voltage Range 50 Hz	60 Hz
24Z	24V	24V
120	**110V**	**120V**
208	~	208V
220W	**200V-220V**	**208V-240V**
240	220V	240V
277	240V	277V
380 ❻	380...400V	440V
480 ❻	**440V**	**480V**
600 ❻	550V	600V

Horsepower ratings shown in the tables are for reference only. ***The final selection of the manual starter depends on the actual motor full load current and service factor.***

- *For motor with service factor less than 1.15.* Use motor nameplate full load current times 0.9 and choose the motor starter with the appropriate current range. Example: Motor F.L.C. = 4.2A; S.F. = 1.0. – 4.2A x 0.9 = 3.78A. Select Catalog Number KTA7-25S-4.0A.

❶ KAIC Assembly Rating Index. See pages F73-F75 for Application Rating Guide.
❷ Other voltages available, see Section A in this catalog. *Non-standard coil voltages not listed here must be ordered and installed separately as renewal parts.*
❸ CLU7-30…43 with KTA7-45H include Type W Mounting Modules for 35mm or 70mm DIN rail or Panel Mounting as necessary from page F17. To add Type W Mounting Modules for 25S or 25H models add **-W** to end of catalog number. See page F69 for modifications.
❹ CLU7-43 supplied with (1) NO and (1) NC front mount auxiliary per contactor.
❺ Catalog numbers and/or specific voltages (i.e. @ 575V) shaded in gray are suitable for Group Installation, per NEC 430-53C, because they are not Type E/F rated. See page F73 for ratings.
❻ Suffix –A10 uses front-mount KT7-PE1-10 300 VAC maximum control circuit. For control circuits greater than 300 VAC use side-mount KT7-PA1-11 and change suffix –A10 to –AS11 (example CLU7-9-22-✱-AS0.16A-**AS11**) Add $65 or see options on page F69.

Ordering Instructions

Specify Catalog Number	
Replace (✱) with Coil Code	**See Coil Code table on this page for codes.**

Reversing Ecombo Starters with Electronic DC Coil, Series CA7 Contactor ❸

Thermal Trip [A]	Magnetic Trip [A]	Index ❶	Typical Three Phase [HP] 200V	230V	460V	575V	Catalog Number ❷	Price
KTA7-25S — Standard Interrupting Capacity								
0.10...0.16	2.1	1	~	~	~	~	CLU7-9E-22-✱-AS0.16A-A10	790
0.16...0.25	3.3	2	~	~	~	~	CLU7-9E-22-✱-AS0.25A-A10	790
0.25...0.40	5.2	3	~	~	~	~	CLU7-9E-22-✱-AS0.4A-A10	790
0.40...0.63	8.2	4	~	~	~	~	CLU7-9E-22-✱-AS0.63A-A10	820
0.63...1	13	5	~	~	~	1/2	CLU7-9E-22-✱-AS1.0A-A10	820
1...1.6	21	6	~	~	1/2	3/4	CLU7-9E-22-✱-AS1.6A-A10	820
1.6...2.5	33	7	1/2	1/2	1	1-1/2	CLU7-9E-22-✱-AS2.5A-A10	820
2.5...4	52	8	3/4	3/4	2	3	CLU7-9E-22-✱-AS4.0A-A10	820
4...6.3	82	9	1	1-1/2	3	5 ❻	CLU7-9E-22-✱-AS6.3A-A10 ❻	820
6.3...10	130	11	2	3	5	7-1/2 ❻	CLU7-12E-22-✱-AS10A-A10 ❻	925
10...16	208	12	3	5	10	10 ❻	CLU7-16E-22-✱-AS16A-A10 ❻	995
14.5...20	260	15	5	5	10	15 ❻	CLU7-23E-22-✱-AS20A-A10 ❻	1040
18.5...25	325	16	5 ❻	7-1/2 ❻	15 ❻	20 ❻	CLU7-23E-22-✱-AS25A-A10 ❻	1040
KTA7-25H — High Interrupting Capacity								
1.6...2.5	33	17	1/2	1/2	1	1-1/2	CLU7-9E-22-✱-AH2.5A-A10	885
2.5...4	52	19	3/4	3/4	2	3	CLU7-9E-22-✱-AH4.0A-A10	885
4...6.3	82	22	1	1-1/2	3	5	CLU7-9E-22-✱-AH6.3A-A10	885
6.3...10	130	24	2	3	5	7-1/2	CLU7-12E-22-✱-AH10A-A10	1010
10...16	208	28	3	5	10	10	CLU7-16E-22-✱-AH16A-A10	1060
14.5...20	260	31	5	5	10	15 ❻	CLU7-23E-22-✱-AH20A-A10 ❻	1110
18...25	325	33	5	7-1/2	15	20 ❻	CLU7-23E-22-✱-AH25A-A10 ❻	1110
KTA7-45H — High Interrupting Capacity ❹								
6.3…10	130	36	2	3	5	7-1/2	CLU7-30E-22-✱-AH10A-A10-W	1298
10…16	208	37	3	5	10	10	CLU7-30E-22-✱-AH16A-A10-W	1298
14.5…20	260	38	5	5	10	15	CLU7-30E-22-✱-AH20A-A10-W	1298
18…25	325	39	7-1/2	7-1/2	15	20	CLU7-30E-22-✱-AH25A-A10-W	1298
23...32	416	41	7-1/2	10	20	25	CLU7-30E-22-✱-AH32A-A10-W	1398
32…45	585	45	10	10	25	30	CLU7-37E-22-✱-AH45A-A10-W	1574
32…45	585	46	10	15	30	30	CLU7-43E-22-✱-AH45A-A10-W ❺	1646

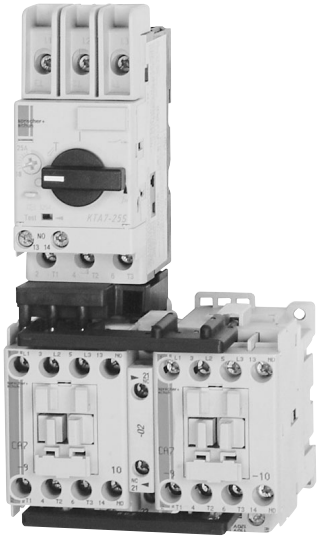

CLU7-9E-22-24E-AS25A-A10

Includes:

- KT7 Motor Controller with 1 NO Auxiliary Contact
- Two CA7-9E...43E Contactors
- Connecting Module (Cat.# KT7-25[S or H]-PEC23)
- Terminal Adaptor for Type E/F Applications
- Reversing Power Wiring Kit (Cat.# CAUT7-PW23)
- Electrical / Mechanical Interlock
- Can mount on one DIN-rail

Optional: ❸

- Type W Mounting Module is optional on 25S & 25H. Type W Module is standard on 45H models. See modifications on page F69.

Coil Codes ❷

DC Coil Codes	Voltage
12E	12V
24E	**24V**
36E	36-48V
48E	48-72V
110E	110-125V
220E	220-250V

Horsepower ratings shown in the tables are for reference only. *The final selection of the manual starter depends on the actual motor full load current and service factor.*

- *For motor with service factor less than 1.15.* Use motor nameplate full load current times 0.9 and choose the motor starter with the appropriate current range. Example: Motor F.L.C. = 4.2A; S.F. = 1.0. – 4.2A x 0.9 = 3.78A. Select Catalog Number KTA7-25S-4.0A.

Ordering Instructions

Specify Catalog Number	
Replace (✱) with Coil Code	**See Coil Code table on this page for codes.**

❶ KAIC Assembly Rating Index. See pages F73-F75 for Application Rating Guide.
❷ CLU7-9E…43E with electronic coils are not interchangeable with non-electronic DC or AC coils.
❸ See Section A for limitations on adding auxiliaries to Electronic DC Coil contacts.
❹ CLU7-30E…43E with KTA7-45H include Type W Mounting Modules for 35mm or 70mm DIN rail or Panel Mounting as necessary from page F17. To add Type W Mounting Modules for 25S or 25H models add **-W** to end of catalog number. See page F69 for modifications.
❺ CLU7-43E supplied with (1) NO and (1) NC front mount auxiliary per contactor.
❻ Catalog numbers and/or specific voltages (i.e. @ 575V) shaded in gray are suitable for Group Installation, per NEC 430-53C, because they are not Type E/F rated. See page F73 for ratings.

Non-Reversing Ecombo*Plus* Starters with AC Coil, Series CA7 Contactors

Thermal Trip [A]	Magnetic Trip [A]	Index ❶	Typical Three Phase [HP] 200V	230V	460V	575V	Catalog Number ❷❻	Price
KTA7-25S — Standard Interrupting Capacity								
0.10...0.16	2.1	1	~	~	~	~	**CK7-9-10-✱-AS0.16A-A11**	**560**
0.16...0.25	3.3	2	~	~	~	~	**CK7-9-10-✱-AS0.25A-A11**	**560**
0.25...0.40	5.2	3	~	~	~	~	**CK7-9-10-✱-AS0.4A-A11**	**560**
0.40...0.63	8.2	4	~	~	~	~	**CK7-9-10-✱-AS0.63A-A11**	**590**
0.63...1	13	5	~	~	~	1/2	**CK7-9-10-✱-AS1.0A-A11**	**590**
1...1.6	21	6	~	~	1/2	3/4	**CK7-9-10-✱-AS1.6A-A11**	**590**
1.6...2.5	33	7	1/2	1/2	1	1-1/2	**CK7-9-10-✱-AS2.5A-A11**	**590**
2.5...4	52	8	3/4	3/4	2	3	**CK7-9-10-✱-AS4.0A-A11**	**590**
4...6.3	82	9	1	1-1/2	3	5 ❺	**CK7-9-10-✱-AS6.3A-A11 ❺**	**590**
6.3...10	130	11	2	3	5	7-1/2 ❺	**CK7-12-10-✱-AS10A-A11 ❺**	**620**
10...16	208	12	3	5	10	10 ❺	**CK7-16-10-✱-AS16A-A11 ❺**	**678**
14.5...20	260	15	5	5	10	15 ❺	**CK7-23-10-✱-AS20A-A11 ❺**	**700**
18.5...25	325	16	5 ❺	7-1/2 ❺	15 ❺	20 ❺	**CK7-23-10-✱-AS25A-A11 ❺**	**700**
KTA7-25H — High Interrupting Capacity								
1.6...2.5	33	17	1/2	1/2	1	1-1/2	**CK7-9-10-✱-AH2.5A-A11**	**654**
2.5...4	52	19	3/4	3/4	2	3	**CK7-9-10-✱-AH4.0A-A11**	**654**
4...6.3	82	22	1	1-1/2	3	5	**CK7-9-10-✱-AH6.3A-A11**	**654**
6.3...10	130	24	2	3	5	7-1/2	**CK7-12-10-✱-AH10A-A11**	**684**
10...16	208	28	3	5	10	10	**CK7-16-10-✱-AH16A-A11**	**750**
14.5...20	260	31	5	5	10	15 ❺	**CK7-23-10-✱-AH20A-A11 ❺**	**770**
18...25	325	33	5	7-1/2	15	20 ❺	**CK7-23-10-✱-AH25A-A11 ❺**	**770**
KTA7-45H — High Interrupting Capacity								
6.3…10	130	36	2	3	5	7-1/2	**CK7-30-11-✱-AH10A-A11**	**975**
10....16	208	37	3	5	10	10	**CK7-30-11-✱-AH16A-A11**	**975**
14.5...20	260	38	5	5	10	15	**CK7-30-11-✱-AH20A-A11**	**975**
18…25	325	39	7-1/2	7-1/2	15	20	**CK7-30-11-✱-AH25A-A11**	**975**
23…32	416	41	7-1/2	10	20	25	**CK7-30-11-✱-AH32A-A11**	**1034**
32…45	585	45	10	10	25	30	**CK7-37-11-✱-AH45A-A11**	**1096**
32…45	585	46	10	15	30	30	**CK7-43-11-✱-AH45A-A11**	**1107**

For applications above 45 amps please consider open type combination starters on page C53.1.

Description ❸

The Ecombo*Plus* starter is a factory assembly consisting of a KT7 controller with 1 NO - 1 NC auxiliary and a CA7 contactor housed in a specially designed frame. All control wiring is pre-wired and brought out to a built-in terminal block, integral to the mounting frame. Terminal Adaptor (Cat.# KT7-25[45]-TE) is also included for Type E applications.

Coil Codes (✱) ❹❻

AC Coil Code	Voltage Range 50 Hz	60 Hz
24Z	24V	24V
120	**110V**	**120V**
208	~	208V
220W	**200V-220V**	**208V-240V**
240	220V	240V
277	240V	277V

Horsepower ratings shown in the tables are for reference only. *The final selection of the manual starter depends on the actual motor full load current and service factor.*

- *For motor with service factor less than 1.15.* Use motor nameplate full load current times 0.9 and choose the motor starter with the appropriate current range. Example: Motor F.L.C. = 4.2A; S.F. = 1.0. – 4.2A x 0.9 = 3.78A. Select Catalog Number KTA7-25S-4.0A.

❶ KAIC Assembly Rating Index. See pages F73-F75 for Application Rating Guide.
❷ See Factory Options on page F69 for additional auxiliary contact configurations.
- KT7 supplied with (1) NO and (1) NC auxiliary contact
- CK7-9…23 supplied with (1) NO auxiliary contact
- CK7-30…37 supplied with (1) NO and (1) NC side mount auxiliary contact
- CK7-43 supplied with (1) NO and (1) NC front mount auxiliary contact

❸ Mounting Options:
- Screw Fixing
- Snap Fixing on (1) or (2) 35 mm DIN Rails
- Snap Fixing on (1) 75 mm DIN Rail

❹ Other voltages available, see Section A in this catalog. *Non-standard coil voltages not listed here must be ordered and installed separately as renewal parts.*
❺ Catalog numbers and/or specific voltages (i.e. @ 575V) shaded in gray are suitable for Group Installation, per NEC 430-53C, because they are not Type E/F rated. See page F73 for ratings.
❻ Suffix –A11 uses front-mount KT7-PE1-11 300 VAC maximum control circuit. This assembly is not applicable with control circuits greater than 300 VAC.

Ordering Instructions

Specify Catalog Number	
Replace (✱) with Coil Code	**See Coil Code table on this page for codes.**

Non-Reversing EcomboPlus Starters with Electronic DC Coil, Series CA7 Contactors ❹❺

Thermal Trip [A]	Magnetic Trip [A]	Index ❶	Typical Three Phase [HP] 200V	230V	460V	575V	Catalog Number ❷	Price
KTA7-25S — Standard Interrupting Capacity								
0.10...0.16	2.1	1	~	~	~	~	CK7-9E-10-✱-AS0.16A-A11	662
0.16...0.25	3.3	2	~	~	~	~	CK7-9E-10-✱-AS0.25A-A11	662
0.25...0.40	5.2	3	~	~	~	~	CK7-9E-10-✱-AS0.4A-A11	662
0.40...0.63	8.2	4	~	~	~	~	CK7-9E-10-✱-AS0.63A-A11	692
0.63...1	13	5	~	~	~	1/2	CK7-9E-10-✱-AS1.0A-A11	692
1...1.6	21	6	~	~	1/2	3/4	CK7-9E-10-✱-AS1.6A-A11	692
1.6...2.5	33	7	1/2	1/2	1	1-1/2	CK7-9E-10-✱-AS2.5A-A11	692
2.5...4	52	8	3/4	3/4	2	3	CK7-9E-10-✱-AS4.0A-A11	692
4...6.3	82	9	1	1-1/2	3	5 ❻	CK7-9E-10-✱-AS6.3A-A11 ❻	692
6.3...10	130	11	2	3	5	7-1/2 ❻	CK7-12E-10-✱-AS10A-A11 ❻	732
10...16	208	12	3	5	10	10 ❻	CK7-16E-10-✱-AS16A-A11 ❻	802
14.5...20	260	15	5	5	10	15 ❻	CK7-23E-10-✱-AS20A-A11 ❻	802
18.5...25	325	16	5 ❻	7-1/2 ❻	15 ❻	20 ❻	CK7-23E-10-✱-AS25A-A11 ❻	802
KTA7-25H — High Interrupting Capacity								
1.6...2.5	33	17	1/2	1/2	1	1-1/2	CK7-9E-10-✱-AH2.5A-A11	752
2.5...4	52	19	3/4	3/4	2	3	CK7-9E-10-✱-AH4.0A-A11	752
4...6.3	82	22	1	1-1/2	3	5	CK7-9E-10-✱-AH6.3A-A11	752
6.3...10	130	24	2	3	5	7-1/2	CK7-12E-10-✱-AH10A-A11	792
10...16	208	28	3	5	10	10	CK7-16E-10-✱-AH16A-A11	852
14.5...20	260	31	5	5	10	15 ❻	CK7-23E-10-✱-AH20A-A11 ❻	892
18...25	325	33	5	7-1/2	15	20 ❻	CK7-23E-10-✱-AH25A-A11 ❻	892
KTA7-45H — High Interrupting Capacity								
6.3…10	130	30	2	3	5	7-1/2	CK7-30E-11-✱-AH10A-A11	1102
10....16	208	37	3	5	10	10	CK7-30E-11-✱-AH16A-A11	1102
14.5...20	260	38	5	5	10	15	CK7-30E-11-✱-AH20A-A11	1102
18…25	325	39	7-1/2	7-1/2	15	20	CK7-30E-11-✱-AH25A-A11	1102
23…32	416	41	7-1/2	10	20	25	CK7-30E-11-✱-AH32A-A11	1197
32…45	585	45	10	10	25	30	CK7-37E-11-✱-AH45A-A11	1227
32…45	585	46	10	15	30	30	CK7-43E-11-✱-AH45A-A11	1282

For applications above 45 amps please consider open type combination starters on page C53.1.

Description ❸

The Ecombo*Plus* starter is a factory assembly consisting of a KT7 controller with 1 NO - 1 NC auxiliary and a CA7-9E…43E contactor housed in a specially designed frame. All control wiring is pre-wired and brought out to a built-in terminal block, integral to the mounting frame. Terminal Adaptor (Cat.# KT7-25[45]-TE) is also included for Type E applications.

Coil Codes ❹

DC Coil Codes	Voltage
12E	12V
24E	24V
36E	36-48V
48E	48-72V
110E	110-125V
220E	220-250V

Horsepower ratings shown in the tables are for reference only. *The final selection of the manual starter depends on the actual motor full load current and service factor.*

- *For motor with service factor less than 1.15.* Use motor nameplate full load current times 0.9 and choose the motor starter with the appropriate current range. Example: Motor F.L.C. = 4.2A; S.F. = 1.0. – 4.2A x 0.9 = 3.78A. Select Catalog Number KTA7-25S-4.0A.

❶ KAIC Assembly Rating Index. See pages F73-F75 for Application Rating Guide.
❷ See Factory Options on page F69 for additional auxiliary contact configurations.
- KT7 supplied with (1) NO and (1) NC auxiliary contact
- CK7-9…23E supplied with (1) NO auxiliary contact
- CK7-30…37E supplied with (1) NO and (1) NC side mount auxiliary contact
- CK7-43E supplied with (1) NO and (1) NC front mount auxiliary contact

❸ Mounting Options:
- Screw Fixing
- Snap Fixing on (1) or (2) 35 mm DIN Rails
- Snap Fixing on (1) 75 mm DIN Rail

❹ CK7-9E…43E with electronic coils are not interchangeable with non-electronic DC or AC coils.
❺ See pages A47 for limitations on adding auxiliaries to Electronic DC Coil contactors.
❻ Catalog numbers and/or specific voltages (i.e. @ 575V) shaded in gray are suitable for Group Installation, per NEC 430-53C, because they are not Type E/F rated. See page F73 for ratings.

Ordering Instructions

Specify Catalog Number	
Replace (✱) with Coil Code	**See Coil Code table on this page for codes.**

Reversing Ecombo*Plus* Starters with AC Coil, Series CA7 Contactors

Thermal Trip [A]	Magnetic Trip [A]	Index ❶	Typical Three Phase [HP] 200V	230V	460V	575V	Catalog Number ❷❻	Price
KTA7-25S — Standard Interrupting Capacity								
0.10...0.16	2.1	1	~	~	~	~	**CKU7-9-22-✱-AS0.16A-A11**	**850**
0.16...0.25	3.3	2	~	~	~	~	**CKU7-9-22-✱-AS0.25A-A11**	**850**
0.25...0.40	5.2	3	~	~	~	~	**CKU7-9-22-✱-AS0.4A-A11**	**850**
0.40...0.63	8.2	4	~	~	~	~	**CKU7-9-22-✱-AS0.63A-A11**	**875**
0.63...1	13	5	~	~	~	1/2	**CKU7-9-22-✱-AS1.0A-A11**	**875**
1...1.6	21	6	~	~	1/2	3/4	**CKU7-9-22-✱-AS1.6A-A11**	**875**
1.6...2.5	33	7	1/2	1/2	1	1-1/2	**CKU7-9-22-✱-AS2.5A-A11**	**875**
2.5...4	52	8	3/4	3/4	2	3	**CKU7-9-22-✱-AS4.0A-A11**	**875**
4...6.3	82	9	1	1-1/2	3	5 ❺	**CKU7-9-22-✱-AS6.3A-A11 ❺**	**875**
6.3...10	130	11	2	3	5	7-1/2 ❺	**CKU7-12-22-✱-AS10A-A11 ❺**	**950**
10...16	208	12	3	5	10	10 ❺	**CKU7-16-22-✱-AS16A-A11 ❺**	**1050**
14.5...20	260	15	5	5	10	15 ❺	**CKU7-23-22-✱-AS20A-A11 ❺**	**1060**
18.5...25	325	16	5 ❺	7-1/2 ❺	15 ❺	20 ❺	**CKU7-23-22-✱-AS25A-A11 ❺**	**1060**
KTA7-25H — High Interrupting Capacity								
1.6...2.5	33	17	1/2	1/2	1	1-1/2	**CKU7-9-22-✱-AH2.5A-A11**	**950**
2.5...4	52	19	3/4	3/4	2	3	**CKU7-9-22-✱-AH4.0A-A11**	**950**
4...6.3	82	22	1	1-1/2	3	5	**CKU7-9-22-✱-AH6.3A-A11**	**950**
6.3...10	130	24	2	3	5	7-1/2	**CKU7-12-22-✱-AH10A-A11**	**1025**
10...16	208	28	3	5	10	10	**CKU7-16-22-✱-AH16A-A11**	**1100**
14.5...20	260	31	5	5	10	15 ❺	**CKU7-23-22-✱-AH20A-A11 ❺**	**1150**
18...25	325	33	5	7-1/2	15	20 ❺	**CKU7-23-22-✱-AH25A-A11 ❺**	**1150**

Description ❸

The Ecombo*Plus* Reversing starter is a factory assembly consisting of a KT7 controller with 1 NO - 1 NC auxiliary and reversing CA7 contactors housed in a specially designed frame. All control wiring is pre-wired and brought out to a built-in terminal block, integral to the mounting frame. A Reversing Power Wiring Kit (Cat.# CAUT7-PW23) is used to wire the reversing contactors. An electrical and mechanical interlock is also provided (Cat.# CM7-02), as well as a Terminal Adaptor (Cat.# KT7-25-TE) for Type E applications.

Horsepower ratings shown in the tables are for reference only. *The final selection of the manual starter depends on the actual motor full load current and service factor.*

- *For motor with service factor less than 1.15.* Use motor nameplate full load current times 0.9 and choose the motor starter with the appropriate current range. Example: Motor F.L.C. = 4.2A; S.F. = 1.0. – 4.2A x 0.9 = 3.78A. Select Catalog Number KTA7-25S-4.0A.

Coil Codes (✱) ❹❻

AC Coil Code	Voltage Range 50 Hz	60 Hz
24Z	24V	24V
120	**110V**	**120V**
208	~	208V
220W	**200V-220V**	**208V-240V**
240	220V	240V
277	240V	277V

❶ KAIC Assembly Rating Index. See pages F73-F75 for Application Rating Guide.
❷ See Factory Options on page F69 for additional auxiliary contact configurations.
- KT7 supplied with (1) NO and (1) NC auxiliary contact
- CKU7 supplied with (2) NO auxiliary contact
- CM7-02 interlock supplied with (2) NC auxiliary contacts

❸ Mounting Options:
- Screw Fixing
- Snap Fixing on (1) or (2) 35 mm DIN Rails
- Snap Fixing on (1) 75 mm DIN Rail

❹ Other voltages available, see Section A in this catalog. *Non-standard coil voltages not listed here must be ordered and installed separately as renewal parts.*
❺ Catalog numbers and/or specific voltages (i.e. @ 575V) shaded in gray are suitable for Group Installation, per NEC 430-53C, because they are not Type E/F rated. See page F73 for ratings.
❻ Suffix –A11 uses front-mount KT7-PE1-11 300 VAC maximum control circuit. This assembly is not applicable with control circuits greater than 300 VAC.

Ordering Instructions

Specify Catalog Number	
Replace (✱) with Coil Code	**See Coil Code table on this page for codes.**

CL8 and CL7 Modifications ❹❺

Modification	Change Last Digit in Catalog Number to: ❶	Price
KT7 Auxiliary (Front Mount 300VAC max.) and Trip Contacts		
Auxiliary Contact 1 NO (CL8 only)	**A10**	55
Auxiliary Contact 1 NC	**A01**	55
Auxiliary Contact 1 NO + 1 NC	**A11**	62
Auxiliary Contact 2 NO	**A20**	62
1 NO SC or OL + 1 NC Auxiliary Contact	**T10A01**	79
1 NO SC or OL + 1 NO Auxiliary Contact	**T10A10**	79
KT7 Auxiliary (Side Mount 600VAC max.) and Trip Contacts		
Auxiliary Contact 1 NO + 1 NC	**AS11**	65
Auxiliary Contact 2 NO	**AS20**	65
1 NC SC or OL + 1 NO Auxiliary Contact	**R10**	85
1 NO SC or OL + 1 NC Auxiliary Contact	**R11**	85

CL8 and CL7 Additions ❹❺

Add desired suffix AFTER auxiliary contact option code.

Addition	Add Suffix to Catalog Number:	Price
Accessories		
Electronic Interfaces (CA7)	**-JE** ❸	94
Surge Suppressor RC (CA7, CA8)	**-R**	54
Surge Suppressor Varistor (CA7, CA8)	**-V**	40
Surge Suppressor Diode (CA7, CA8)	**-D**	52
Lockable Twist Knob (KT7) - Black	**-KN**	27
Lockable Twist Knob (KT7) - Red/Yellow	**-KRY**	34
Type W Mounting Module for CL7-9…23 includes 45mm short module (W-32489) ❷	**-W**	50
Type W Mounting Module for CLU7-9…23 includes 45mm (W-32849) and 54mm (W-32490) short module ❷	**-W**	100
Additional CA7 Contactor Auxiliaries (Side Mount)		
1 NC	**-S01**	45
1 NO	**-S10**	45
1 NO + 1 NC	**-S11**	57
2 NO	**-S20**	57
Additional CA7 & CA8 Contactor Auxiliaries (Front Mount)		
1 NO + 1 NC	**-F11**	57
2 NO	**-F20**	57
2 NO + 2 NC	**-F22**	57
Additional KT7 Auxiliaries (Side Mount) ❺		
2 NC	**-AS02**	79
2 NO	**-AS20**	79
1 NO + 1 NC	**-AS11**	79
Additional KT7 Trip Contacts (Side Mount) ❺		
1 NO SC or OL + 1 NO SC	**-R00**	94
1 NO SC or OL + 1 NC SC	**-R01**	94
1 NC SC or OL + 1 NO SC	**-R10**	94
1 NC SC or OL + 1 NC SC	**-R11**	94
1 NO SC + 1 NC SC	**-M11**	94

CK7 Modifications ❺

Modification	Change Last Digits (A11) in Catalog Number to: ❶	Price
CK7 Auxiliary (Front Mount 300VAC max.) and Trip Contacts		
Auxiliary Contact 2 NO	**A20**	52
1 NO SC or OL + 1 NC Auxiliary Contact	**T10A01**	17
1 NO SC or OL + 1 NO Auxiliary Contact	**T10A10**	17

CK7 Additions ❹❺

Add desired suffix AFTER auxiliary contact option code.

Addition	Add Suffix to Catalog Number:	Price
Accessories		
Electronic Interfaces (CA7)	**-JE**	94
Surge Suppressor RC (CA7)	**-R**	54
Surge Suppressor Varistor (CA7)	**-V**	40
Surge Suppressor Diode (CA7)	**-D**	52
Socket and Plug for Control Circuit	**-SP**	45
Lockable Twist Knob (KT7) - Black	**-KN**	27
Lockable Twist Knob (KT7) - Red/Yellow	**-KRY**	34
Additional Contactor Auxiliaries (Side Mount)		
1 NC	**-S01**	45
1 NO	**-S10**	45
1 NO + 1 NC	**-S11**	57
2 NO	**-S20**	57
Additional KT7 Auxiliaries (Side Mount) ❺		
2 NC	**-AS02**	79
2 NO	**-AS20**	79
1 NO + 1 NC	**-AS11**	79
Additional KT7 Trip Contacts (Side Mount) ❺		
1 NO SC or OL + 1 NO SC	**-R00**	94
1 NO SC or OL + 1 NC SC	**-R01**	94
1 NC SC or OL + 1 NO SC	**-R10**	94
1 NC SC or OL + 1 NC SC	**-R11**	94
1 NO SC + 1 NC SC	**-M11**	94

❶ For CL8, change last digit "X" to one of the modifications listed.
Example: CL8-09-10-✱-AS0.16A-**X** changes to CL8-09-10-✱-AS0.16A-**A10**.
For CL7, change last digits "A10" to one of the modifications listed.
Example: CL7-9-10-*-AS0.16A-**A10** changes to CL7-9-10-✱-AS0.16A-**A01**.

❷ CL7/CLU7-30…43 include all Type W Mounting Modules necessary from page F17.

❸ CRI7E-24 will be used. CRI7E-12 by special order only.

❹ See pages A47 for limitations on adding auxiliaries to Electronic DC Coil contactors.

❺ Front Mount Auxiliary contacts have a maximum rating of 300VAC. Side Mounted Auxiliaries have a maximum rating of 600VAC where there would be no connection to the terminal block provided.

Non-Reversing 3-Component Ecombo Starters with AC Coil ❸❺

Rated Oper. Current [A] ❻	Overload Adj. Range [A]	Magnetic Trip [A]	Index ❶	Typical Three Phase [HP] ❻ 200V	230V	460V	575V	Catalog Number ❷❹❼	Price
KTB7-25S — Standard Interrupting Capacity									
0.40	0.1…0.5	5.2	3B	~	~	~	~	**CLT7-9-✱-B2S0.4-A10-D1AB**	**644**
0.40	0.1…0.5	5.2	3B	~	~	~	~	**CLT7-9-✱-B2S0.4-A10-EAB**	**654**
1.0	0.2…1.0	13	5B	~	~	~	1/2	**CLT7-9-✱-B2S1.0-A10-D1BB**	**675**
1.0	0.2…1.0	13	5B	~	~	~	1/2	**CLT7-9-✱-B2S1.0-A10-EBB**	**685**
2.5	1.0…5.0	33	7B	1/2	1/2	1	~	**CLT7-9-✱-B2S2.5-A10-D1CB**	**675**
2.5	1.0…5.0	33	7B	1/2	1/2	1	~	**CLT7-9-✱-B2S2.5-A10-ECB**	**685**
KTB7-25H — High Interrupting Capacity									
2.5	1.0…5.0	33	17B	1/2	1/2	1	~	**CLT7-9-✱-B2H2.5-A10-D1CB**	**738**
2.5	1.0…5.0	33	17B	1/2	1/2	1	~	**CLT7-9-✱-B2H2.5-A10-ECB**	**749**
2.5	1.0…5.0	33	18B	1/2	1/2	1	1-1/2	**CLT7-23-✱-B2H2.5-A10-D1CB**	**812**
2.5	1.0…5.0	33	18B	1/2	1/2	1	1-1/2	**CLT7-23-✱-B2H2.5-A10-ECB**	**823**
4.0	1.0…5.0	52	21B	3/4	3/4	2	3	**CLT7-23-✱-B2H4.0-A10-D1CB**	**812**
4.0	1.0…5.0	52	21B	3/4	3/4	2	3	**CLT7-23-✱-B2H4.0-A10-ECB**	**823**
10	5.1…27	130	27B	2	3	5	7-1/2	**CLT7-30-✱-B2H10-A10-EED**	**936**
16	5.1…27	208	30B	3	5	10	10	**CLT7-30-✱-B2H16-A10-EED**	**982**
25	5.1…27	325	34B	5	7-1/2	15	~	**CLT7-30-✱-B2H25-A10-EED**	**982**
KTB7-45H — High Interrupting Capacity									
25	5.1…27	325	39B	5	7-1/2	15	20	**CLT7-30-✱-B4H25-A10-EED**	**1134**
32	9…45	416	41B	7-1/2	10	20	20	**CLT7-30-✱-B4H32-A10-EFD**	**1195**
32	9…45	416	42B	7-1/2	10	20	20	**CLT7-37-✱-B4H32-A10-EFD**	**1241**
45	9…45	585	45B	10	10	25	~	**CLT7-37-✱-B4H45-A10-EFD**	**1241**
45	9…45	585	46B	10	15	30	~	**CLT7-43-✱-B4H45-A10-EFD**	**1253**

Includes:

- KTB7 Motor Controller
- CA7 Contactor (AC)
- CEP7 Solid State Overload Relay
- KT7 PSC and PNC Connectors
- Terminal Adaptor for Type E Applications
- Mounting Modules for 25A or 45A Frame Units as required from page F17.
- See page F72 for Factory Options

Coil Codes (✱) ❷

AC Coil Code	Voltage Range 50 Hz	60 Hz
24Z	**24V**	**24V**
120	**110V**	**120V**
208	~	208V
220W	200V-220V	208V-240V
240	220V	240V
277	240V	277V
380 ❼	380...400V	440V
480 ❼	**440V**	**480V**
600 ❼	550V	600V

❶ KAIC Assembly Rating Index. See pages F73-F75 for Application Rating Guide.

❷ Other voltages available, see Section A in this catalog. *Non-standard coil voltages not listed here must be ordered and installed separately as renewal parts.*

❸ All CLT7 contactors are supplied with Auxiliary Contacts as follows;
CLT7-9…23 (1) NO Internal Mount
CLT7-30…37 (1) NO Side Mount
CLT7-43 (1) NO & (1) NC Front Mount
All KTB7s are supplied with (1) NO auxiliary contact (A10), which should be used in series with the NC contact on the overload (95-96).

❹ See page F72 for CEP7 Overload Relay information.

❺ Horsepower ratings shown in tables are for reference only. ***The final selection of the magnetic manual starter and solid state overload relay depends on the actual motor full load current and service factor.***

❻ The KTB7 Motor Circuit Controller is designed and tested to protect a motor circuit in case of a short circuit. A separate Sprecher + Schuh CEP7-EE_ overload relay with selectable trip class should be used to protect the motor against overload.
In Applications with motor starting times exceeding 10 seconds (heavy duty starting) the rated operational current (I_e) of the motor FLA must be multiplied by the following factors for selection of the KTB7 Motor Circuit Controller KTB7-25S, KTB7-25H/32H and KTB7-45H.
Trip classes according to UL 508 Section 52 and IEC 60947-4-1
CLASS 10 = 1.0, CLASS 15 = 1.22, CLASS 20 = 1.42, CLASS 25 = 1.58, CLASS 30 = 1.73
The maximum number of motor starts in 25 cycles/hour with a minimum OFF-time of 120 seconds between cycles. This additional calculation and selecting a larger frame size is necessary to compensate (dissipate) the increased heat resulting from long acceleration applications effecting the rated operational current of the KTB7.

❼ Catalog number includes –A10 which uses front-mount KT7-PE1-10 300 VAC maximum control circuit. For control circuits greater than 300 VAC use side-mount KT7-PA1-11 and change –A10 to –AS11 (example CLT7-9-✱-B2S0.4-**AS11**-D1AB) Add $65 or see options on page F72.

Ordering Instructions

Specify Catalog Number	
Replace (✱) with Coil Code	**See Coil Code table on this page for codes.**

Reversing 3-Component Ecombo Starters with AC Coil ❸❹❺

Rated Oper. Current [A] ❻	Overload Adj. Range [A]	Magnetic Trip [A]	Index ❶	Typical Three Phase [HP] 200V	230V	460V	575V	Catalog Number ❷❹❼	Price
KTB7-25S — Standard Interrupting Capacity									
0.40	0.1…0.5	5.2	3B	~	~	~	~	**CLUT7-9-✱-B2S0.4-A10-D1AB**	**928**
0.40	0.1…0.5	5.2	3B	~	~	~	~	**CLUT7-9-✱-B2S0.4-A10-EAB**	**938**
1.0	0.2…1.0	13	5B	~	~	~	1/2	**CLUT7-9-✱-B2S1.0-A10-D1BB**	**959**
1.0	0.2…1.0	13	5B	~	~	~	1/2	**CLUT7-9-✱-B2S1.0-A10-EBB**	**970**
2.5	1.0…5.0	33	7B	1/2	1/2	1	~	**CLUT7-9-✱-B2S2.5-A10-D1CB**	**959**
2.5	1.0…5.0	33	7B	1/2	1/2	1	~	**CLUT7-9-✱-B2S2.5-A10-ECB**	**970**
KTB7-25H — High Interrupting Capacity									
2.5	1.0…5.0	33	17B	1/2	1/2	1	~	**CLUT7-9-✱-B2H2.5-A10-D1CB**	**1022**
2.5	1.0…5.0	33	17B	1/2	1/2	1	~	**CLUT7-9-✱-B2H2.5-A10-ECB**	**1033**
2.5	1.0…5.0	33	18B	1/2	1/2	1	1-1/2	**CLUT7-23-✱-B2H2.5-A10-D1CB**	**1173**
2.5	1.0…5.0	33	18B	1/2	1/2	1	1-1/2	**CLUT7-23-✱-B2H2.5-A10-ECB**	**1185**
4.0	1.0…5.0	52	21B	3/4	3/4	2	3	**CLUT7-23-✱-B2H4.0-A10-D1CB**	**1173**
4.0	1.0…5.0	52	21B	3/4	3/4	2	3	**CLUT7-23-✱-B2H4.0-A10-ECB**	**1185**
10	5.1…27	130	27B	2	3	5	7-1/2	**CLUT7-30-✱-B2H10-A10-EED**	**1346**
16	5.1…27	208	30B	3	5	10	10	**CLUT7-30-✱-B2H16-A10-EED**	**1391**
25	5.1…27	325	34B	5	7-1/2	15	~	**CLUT7-30-✱-B2H25-A10-EED**	**1391**
KTB7-45H — High Interrupting Capacity									
25	5.1…27	325	39B	5	7-1/2	15	20	**CLUT7-30-✱-B4H25-A10-EED**	**1542**
32	9…45	416	41B	7-1/2	10	20	20	**CLUT7-30-✱-B4H32-A10-EFD**	**1610**
32	9…45	416	42B	7-1/2	10	20	20	**CLUT7-37-✱-B4H32-A10-EFD**	**1691**
45	9…45	585	45B	10	10	25	~	**CLUT7-37-✱-B4H45-A10-EFD**	**1691**
45	9…45	585	46B	10	15	30	~	**CLUT7-43-✱-B4H45-A10-EFD**	**1771**

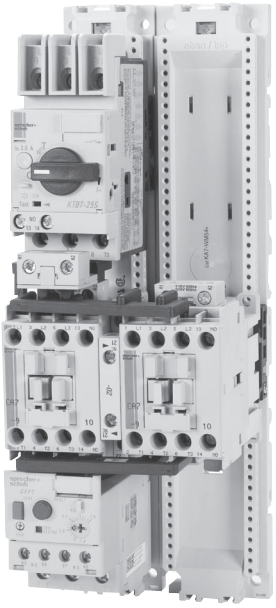

Includes:

- KTB7 Motor Controller
- CAU7 Reversing Contactor (AC)
- CEP7 Solid State Overload Relay
- KT7 PSC and PNC Connectors
- Terminal Adaptor for Type E Applications
- Mounting Modules for 25A or 45A Frame Units as required from page F17.
- See page F72 for Factory Options

Coil Codes (✱) ❷

AC Coil Code	Voltage Range 50 Hz	60 Hz
24Z	**24V**	**24V**
120	**110V**	**120V**
208	~	208V
220W	200V-220V	208V-240V
240	220V	240V
277	240V	277V
380 ❼	380...400V	440V
480 ❼	**440V**	**480V**
600 ❼	550V	600V

Ordering Instructions

Specify Catalog Number	
Replace (✱) with Coil Code	**See Coil Code table on this page for codes.**

❶ KAIC Assembly Rating Index. See pages F73-F75 for Application Rating Guide.

❷ Other voltages available, see Section A in this catalog. *Non-standard coil voltages not listed here must be ordered and installed separately as renewal parts.*

❸ All CLUT7 are supplied with Auxiliary Contacts for customer use as follows;
CLUT7-9…23 (1) NO Internal Mount
CLUT7-30…37 (1) NO Side Mount
CLUT7-43 (1) NO & (1) NC Front Mount
CM7-02 interlock (2) NC (Electrical Interlocks)
All KTB7s are supplied with (1) NO auxiliary contact (A10), which should be used in series with the NC contact on the overload (95-96).

❹ All CAU7 reversing contactors are supplied with CM7-02, including (2) NC contacts for electronic interlocking (not available for customer use).

❺ Horsepower ratings shown in tables are for reference only. ***The final selection of the magnetic manual starter and solid state overload relay depends on the actual motor full load current and service factor.***

❻ The KTB7 Motor Circuit Controller is designed and tested to protect a motor circuit in case of a short circuit. A separate Sprecher + Schuh CEP7-EE_ overload relay with selectable trip class should be used to protect the motor against overload.
In Applications with motor starting times exceeding 10 seconds (heavy duty starting) the rated operational current (I_e) of the motor FLA must be multiplied by the following factors for selection of the KTB7 Motor Circuit Controller KTB7-25S, KTB7-25H/32H and KTB7-45H.
Trip classes according to UL 508 Section 52 and IEC 60947-4-1
CLASS 10 = 1.0, CLASS 15 = 1.22, CLASS 20 = 1.42, CLASS 25 = 1.58, CLASS 30 = 1.73
The maximum number of motor starts in 25 cycles/hour with a minimum OFF-time of 120 seconds between cycles. This additional calculation and selecting a larger frame size is necessary to compensate (dissipate) the increased heat resulting from long acceleration applications effecting the rated operational current of the KTB7.

❼ Catalog number includes –A10 which uses front-mount KT7-PE1-10 300 VAC maximum control circuit. For control circuits greater than 300 VAC use side-mount KT7-PA1-11 and change –A10 to –AS11 (example CLUT7-9-✱-B2S0.4-**AS11**-D1AB) Add $65 or see options on page F72.

CLT7/CLUT7 Modifications ❿

Modification	Change "X" Digit in Catalog Number to: ❽	Price Adder
KT7 Auxiliary (Front Mount 300VAC max.) and Trip Contacts		
Auxiliary Contact 1 NO + 1 NC	**A11**	**62**
Auxiliary Contact 2 NO	**A20**	**62**
1 NO SC + 1 NC Auxiliary Contact	**T10A01**	**79**
1 NO SC + 1 NO Auxiliary Contact	**T10A10**	**79**
KT7 Auxiliary (Side Mount 300VAC max.) and Trip Contacts		
Auxiliary Contact 1 NO + 1 NC	**AS11**	**65**
Auxiliary Contact 2 NO	**AS20**	**65**
1 NC SC + 1 NO Auxiliary Contact	**R10**	**85**
1 NC SC + 1 NC Auxiliary Contact	**R11**	**85**

CLT7/CLUT7 Additions ❿

Addition	Add Suffix to end of Catalog Number:	Price Adder
Accessories		
Electronic Interfaces	**-JE**	**94**
Surge Suppressor RC	**-R**	**54**
Surge Suppressor Varistor	**-V**	**40**
Surge Suppressor Diode	**-D**	**52**
Lockable Twist Knob (KT7) - Black	**-KN**	**27**
Lockable Twist Knob (KT7) - Red/Yellow	**-KRY**	**34**
Additional CA7 Contactor Auxiliaries (Side Mount) ❾		
1 NC	**-S01**	**45**
1 NO	**-S10**	**45**
1 NO + 1 NC	**-S11**	**57**
2 NO	**-S20**	**57**
Additional CA7 Contactor Auxiliaries (Front Mount)		
1 NO + 1 NC	**-F11**	**57**
2 NO	**-F20**	**57**
2 NO + 2 NC	**-F22**	**57**
Additional KT7 Auxiliaries (Side Mount) ❾❿		
2 NC	**-AS02**	**79**
2 NO	**-AS20**	**79**
1 NO + 1 NC	**-AS11**	**79**
Additional KT7 Trip Contacts (Side Mount) ❿		
1 NO SC + 1 NO SC	**-R00**	**94**
1 NO SC + 1 NC SC	**-R01**	**94**
1 NC SC + 1 NC SC	**-R11**	**94**

CEP7 Solid State Overload Relay ❶❷❸

(As specified in the CLT7/CLUT7 Catalog Number)

For use with contactor...	Amp Range	Last Suffix in Catalog Number ❺	Catalog Number (of Overload Relay used)
3-Phase / Manual Reset / Class 10			
CA7-9...CA7-23	0.1...0.5	**D1AB**	CEP7-ED1AB
	0.2...1.0	**D1BB**	CEP7-ED1BB
	1.0...5.0	**D1CB**	CEP7-ED1CB
3-Phase / Auto or Manual / Adjustable Trip Class 10, 15, 20 & 30			
CA7-9...CA7-23	0.1...0.5	**EAB**	CEP7-EEAB
	0.2...1.0	**EBB**	CEP7-EEBB
	1.0...5.0	**ECB**	CEP7-EECB
CA7-30...CA7-43	5.4...27	**EED**	CEP7-EEED
	9...45	**EFD**	CEP7-EEFD

CEP7 Side Mount Module Addition ❹❼❾

Addition	For use with…	Add Suffix to Catalog Number	Price Adder
Remote Reset Module	Side-mount to any CEP7-EE_	**-ERR**	**100**
Jam Protection and Remote Reset Module		**-EJM**	**110**
Ground Fault Protection and Remote Reset Module ❻	Side-mount to any CEP7-EE_	**-EGF**	**110**
Ground Fault/Jam Protection and Remote Reset Module ❻	Must use with CEP7-CBCT_ Current Sensor	**-EGJ**	**145**
PTC Thermistor Relay and Remote Reset Module	Side-mount to any CEP7-EE_ Side-mount to any CEP7-EE_	**-EPT**	**125**
PROFIBUS Network Communication Module		**-EPRB**	**415**
Ethernet Network Communication Module		**-ETN**	**422**

❶ 3-phase CEP7 units are only designed for 3∅ applications.
❷ The reset time of a CEP7 set in the automatic mode is approximately 180 seconds.
❸ CEP7 Overload relays do not work with Variable Frequency Drives or any Sprecher + Schuh Softstarter with braking options.
❹ Side mount modules must have 24 - 240V, 47 - 63HZ or DC applied to terminals A1 and A2 for control power. See Section B for connection details.
❺ CEP7 Overloads shown are UL approved. Other overload combinations may be possible. Contact your Sprecher+Schuh representative.
❻ ATTENTION: The CEP7 Overload relay is not a ground fault circuit interrupter for personnel protection as defined in Article 100 of the NEC.
❼ See Section B for Technical Data, Wiring, and DIP Switch set up.
❽ For CLT7, change digit "A10" to one of the modifications listed. Example: Change CLT7-9-✱-B2S0.4-**A10**-D1AB to CLT7-9-✱-B2S0.4-**A11**-D1AB.
❾ Side mount auxiliaries and CEP7 modules change the width dimension of the device. See Dimensions in this section for more information.
❿ Front Mount Auxiliary contacts have a maximum rating of 300VAC. Side Mounted Auxiliaries have a maximum rating of 600VAC. See page F10 for additional information.

KT7 Assembly – Application Rating Chart *(Ratings are dependent on type of application)* ❶

Rating Index	Assembly Components		Manual Controller or Group Installation				Combination Motor Controller (Type F)				Self-Protected Combination Motor Controller (Type E)	
			480V		600V		480Y / 277V		600Y / 347V		480Y / 277V	600Y / 347V
	KT7	Minimum Contactor Size	Type 1 KAIC	Type 2 KAIC	Type 1 KAIC	Type 2 KAIC	Type 1 KAIC	Type 2 KAIC	Type 1 KAIC	Type 2 KAIC	Type E KAIC	Type E KAIC
KTA7 + CA7 UL Assemblies (CL7 / CLU7/ CK7 / CKU7)												
1	KTA7-25S-0.16A	CA7-9	65	65	47	47	65	65	47	47	65	47
2	KTA7-25S-0.25A	CA7-9	65	65	47	47	65	65	47	47	65	47
3	KTA7-25S-0.4A	CA7-9	65	65	47	47	65	65	47	47	65	47
4	KTA7-25S-0.63A	CA7-9	65	65	47	47	65	65	47	47	65	47
5	KTA7-25S-1.0A	CA7-9	65	65	47	47	65	65	47	47	65	47
6	KTA7-25S-1.6A	CA7-9	65	65	47	47	65	65	47	47	65	47
7	KTA7-25S-2.5A	CA7-9	65	65	30	10	65	65	30	10	65	~
8	KTA7-25S-4.0A	CA7-9	65	50	30	~	65	~	30	~	~	~
--	KTA7-25S-4.0A	CA7-30	65	~	30	~	65	~	30	~	~	~
9	KTA7-25S-6.3A	CA7-9	65	50	30	~	65	~	~	~	~	~
11	KTA7-25S-10A	CA7-9	65	50	30	~	65	~	~	~	~	~
12	KTA7-25S-16A	CA7-12	30	~	30	~	30	~	~	~	~	~
14	KTA7-25S-16A	CA7-30	30	~	30	~	30	~	~	~	~	~
15	KTA7-25S-20A	CA7-16	30	~	30	~	10	~	~	~	~	~
16	KTA7-25S-25A	CA7-23	30	~	30	~	~	~	~	~	~	~
--	KTA7-32S-29A	CA7-30	30	10	30	~	~	~	~	~	~	~
--	KTA7-32S-32A	CA7-37	30	10	30	~	~	~	~	~	~	~
17	KTA7-25H-2.5A	CA7-9	65	65	30	10	65	65	30	10	65	~
18	KTA7-25H-2.5A	CA7-30	65	65	30	30	65	65	30	30	65	30
19	KTA7-25H-4.0A	CA7-9	65	65	30	~	65	65	30	~	~	~
21	KTA7-25H-4.0A	CA7-30	65	65	30	30	65	65	30	30	65	30
22	KTA7-25H-6.3A	CA7-9	65	65	30	~	65	65	30	~	~	~
23	KTA7-25H-6.3A	CA7-30	65	65	30	~	65	65	30	30	65	30
24	KTA7-25H-10A	CA7-9	65	65	30	~	65	65	30	~	~	~
27	KTA7-25H-10A	CA7-30	65	65	30	~	65	65	30	30	65	30
28	KTA7-25H-16A	CA7-12	65	65	30	~	65	65	30	~	~	~
30	KTA7-25H-16A	CA7-30	65	65	30	~	65	65	30	30	65	30
31	KTA7-25H-20A	CA7-23	65	65	30	~	65	65	~	~	~	~
32	KTA7-25H-20A	CA7-30	65	65	30	~	65	65	~	~	65	~
33	KTA7-25H-25A	CA7-23	65	65	30	~	65	65	~	~	~	~
34	KTA7-25H-25A	CA7-30	65	65	30	~	65	65	~	~	65	~
--	KTA7-32H-29A	CA7-30	65	65	30	~	~	~	~	~	~	~
--	KTA7-32H-32A	CA7-37	65	65	30	~	~	~	~	~	~	~
36	KTA7-45H-10A	CA7-30	65	65	30	30	65	65	30	30	65	30
37	KTA7-45H-16A	CA7-30	65	65	30	30	65	65	30	30	65	30
38	KTA7-45H-20A	CA7-30	65	65	30	30	65	65	30	30	65	30
39	KTA7-45H-25A	CA7-30	65	65	30	30	65	65	30	30	65	30
41	KTA7-45H-32A	CA7-30	65	65	30	30	65	65	30	30	65	30
45	KTA7-45H-45A	CA7-37	65	65	18	10	65	65	~	~	65	~
46	KTA7-45H-45A	CA7-43	65	65	18	10	65	65	~	~	65	~

Gray type indicates non-cataloged assembly. Contact your Sprecher+ Schuh representative for information.

❶ The ratings in these tables assume connection between components are made with Sprecher + Schuh Connection Modules. Engineering Practice allows wire connection as an alternative.

KT7 Assembly – Application Rating Chart *(Ratings are dependent on type of application)* ❶❷

Rating Index	Assembly Components		Manual Controller or Group Installation				Combination Motor Controller (Type F)				Self-Protected Combination Motor Controller (Type E)	
			480V		600V		480Y / 277V		600Y / 347V		480Y / 277V	600Y / 347V
	KT7	Minimum Contactor Size	Type 1 KAIC	Type 2 KAIC	Type 1 KAIC	Type 2 KAIC	Type 1 KAIC	Type 2 KAIC	Type 1 KAIC	Type 2 KAIC	Type E KAIC	Type E KAIC
KTC7 + CA7 UL Assemblies ❶												
❶	**KTC7-25S-0.16A**	CA7-9…23	65	65	47	47	65	65	47	47	65	47
	KTC7-25S-0.25A	CA7-9…23	65	65	47	47	65	65	47	47	65	47
	KTC7-25S-0.4A	CA7-9…23	65	65	47	47	65	65	47	47	65	47
	KTC7-25S-0.63A	CA7-9…23	65	65	47	47	65	65	47	47	65	47
	KTC7-25S-1.0A	CA7-9…23	65	65	47	47	65	65	47	47	65	47
	KTC7-25S-1.6A	CA7-9…23	65	65	30	10	65	65	30	10	65	~
	KTC7-25S-2.5A	CA7-9…23	65	50	30	~	65	~	30	~	~	~
	KTC7-25S-2.5A	CA7-23	65	50	30	~	65	~	~	~	~	~
	KTC7-25S-4.0A	CA7-9…23	65	50	30	~	65	~	~	~	~	~
	KTC7-25S-6.3A	CA7-12…23	65	50	30	~	65	~	~	~	~	~
	KTC7-25S-10A	CA7-12…43	30	~	30	~	30	~	~	~	~	~
	KTC7-25S-16A	CA7-23	30	~	30	~	10	~	~	~	~	~
❶	**KTC7-25H-16A**	CA7-23	65	65	30	~	65	65	~	~	~	~
	KTC7-25H-16A	CA7-30	65	65	30	~	65	65	~	~	65	~
	KTC7-25H-20A	CA7-23	65	65	30	~	65	65	~	~	~	~
	KTC7-25H-20A	CA7-30	65	65	30	~	65	65	~	~	65	~
❶	**KTC7-45H-25A**	CA7-30	65	65	30	30	65	65	30	30	65	30
	KTC7-45H-32A	CA7-37	65	65	18	10	65	65	~	~	65	~

❶ Non-cataloged assemblies. Contact your Sprecher+ Schuh representative for information.
❷ The ratings in these tables assume connection between components are made with Sprecher + Schuh Connection Modules. Engineering Practice allows wire connection as an alternative.

KT7 Assembly – Application Rating Chart *(Ratings are dependent on type of application)* ❶

Rating Index	Assembly Components		Manual Controller or Group Installation				Combination Motor Controller (Type F)				Self-Protected Combination Motor Controller (Type E)	
			480V		600V		480Y / 277V		600Y / 347V		480Y / 277V	600Y / 347V
	KT7	Minimum Contactor Size	Type 1 KAIC	Type 2 KAIC	Type 1 KAIC	Type 2 KAIC	Type 1 KAIC	Type 2 KAIC	Type 1 KAIC	Type 2 KAIC	Type E KAIC	Type E KAIC
KTA7 + CA8 UL Assemblies (CL8 / CLU8)												
--	KTA7-25S-(0.16A…1.0A)	CA8-05	65	65	47	~	65	~	47	~	~	~
--	KTA7-25S-1.6A	CA8-05	65	~	47	~	65	~	47	~	~	~
--	KTA7-25S-(2.5A…4.0A)	CA8-05	65	~	30	~	65	~	30	~	~	~
--	KTA7-25S-6.3A	CA8-05	65	~	~	~	65	~	~	~	~	~
1M	**KTA7-25S-0.16A**	CA8-09	65	65	47	~	65	65	47	~	~	~
2M	**KTA7-25S-0.25A**	CA8-09	65	65	47	~	65	65	47	~	~	~
3M	**KTA7-25S-0.4A**	CA8-09	65	65	47	~	65	65	47	~	~	~
4M	**KTA7-25S-0.63A**	CA8-09	65	65	47	~	65	65	47	~	~	~
5M	**KTA7-25S-1.0A**	CA8-09	65	65	47	~	65	65	47	~	~	~
6M	**KTA7-25S-1.6A**	CA8-09	65	65	47	~	65	65	47	~	~	~
7M	**KTA7-25S-2.5A**	CA8-09	65	~	30	~	65	~	30	~	~	~
8M	**KTA7-25S-4.0A**	CA8-09	65	~	30	~	65	~	30	~	~	~
9M	**KTA7-25S-6.3A**	CA8-09	65	~	30	~	65	~	~	~	~	~
10M	**KTA7-25S-10A**	CA8-09	65	~	30	~	65	~	~	~	~	~
--	KTA7-25S-(2.5A…4.0A)	CA8-12	65	~	30	~	65	~	30	~	~	~
--	KTA7-25S-6.3A	CA8-12	65	~	~	~	65	~	~	~	~	~
11M	**KTA7-25S-10A**	CA8-09	65	~	~	~	65	~	~	~	~	~
12M	**KTA7-25S-16A**	CA8-12	30	~	30	~	30	~	~	~	~	~

Rating Index	Assembly Components			Self-Protected Combination Motor Controller (Type E KAIC) ❷		
	KT7	Minimum Contactor Size	Overload	208V-240V	480Y / 277V	600Y / 347V
KTB7 + CA7 + CEP7 UL Assemblies (CLT7 / CLUT7)						
3B	**KTB7-25S-0.4A**	CA7-9	CEP7-ED1AB	65	65	47
3B	**KTB7-25S-0.4A**	CA7-9	CEP7-EEAB	65	65	47
5B	**KTB7-25S-1.0A**	CA7-9	CEP7-ED1BB	65	65	47
5B	**KTB7-25S-1.0A**	CA7-9	CEP7-EEBB	65	65	47
7B	**KTB7-25S-2.5A**	CA7-9	CEP7-ED1CB	65	65	~
7B	**KTB7-25S-2.5A**	CA7-9	CEP7-EECB	65	65	~
17B	**KTB7-25H-2.5A**	CA7-9	CEP7-ED1CB	65	65	~
17B	**KTB7-25H-2.5A**	CA7-9	CEP7-EECB	65	65	~
18B	**KTB7-25H-2.5A**	CA7-23	CEP7-ED1CB	65	65	30
18B	**KTB7-25H-2.5A**	CA7-23	CEP7-EECB	65	65	30
21B	**KTB7-25H-4.0A**	CA7-23	CEP7-ED1CB	65	65	30
21B	**KTB7-25H-4.0A**	CA7-23	CEP7-EECB	65	65	30
27B	**KTB7-25H-10A**	CA7-30	CEP7-EEED	65	65	30
30B	**KTB7-25H-16A**	CA7-30	CEP7-EEED	65	65	30
34B	**KTB7-25H-25A**	CA7-30	CEP7-EEED	65	65	~
39B	**KTB7-45H-25A**	CA7-30	CEP7-EEED	65	65	30
41B	**KTB7-45H-32A**	CA7-30	CEP7-EEFD	65	65	30
42B	**KTB7-45H-32A**	CA7-37	CEP7-EEFD	65	65	30
45B	**KTB7-45H-45A**	CA7-37	CEP7-EEFD	65	65	~
46B	**KTB7-45H-45A**	CA7-43	CEP7-EEFD	65	65	~

Definition of Type 2 short-circuit coordination per UL508

- The contactor or starter must not endanger persons or plant in the event of a short-circuit.
- The contactor or starter must be suitable for continuous use.
- No damage to the overload relay or other parts may occur with the exception of welding of the contactor or starter contacts if these can be easily separated without appreciable deformation (such as with a screwdriver).

In the event of a short-circuit, fast-opening, strong current-limiting KT7 motor protectors make it possible to build economical, fully short-circuit coordinated starter combinations in accordance with UL508E, Type 2 coordination.

Gray type indicates non-cataloged assembly. Contact your Sprecher+ Schuh representative for information.

❶ The ratings in these tables assume connection between components are made with Sprecher + Schuh Connection Modules.
Engineering Practice allows wire connection as an alternative.

❷ UL approved, File 125316.

KT7 Assembly – IEC Application Rating Chart *(Ratings are dependent on type of application)* ❶

Rating Index	Assembly Components		IEC kW Ratings for Standard Motors, 1500 rpm Max. kW, 50Hz ❷				Max. Short-Circuit Current [kA] IEC Type 1 Coordination				Max. Short-Circuit Current [kA] IEC Type 2 Coordination			
	KT7	Min. Contactor	230V	400V	500V	690V	230V	400V	500V	690V	230V	400V	500V	690V
KTA7 + CA7 IEC Assemblies (CL7 / CLU7/ CK7 / CKU7)														
1	KTA7-25S-0.16A	CA7-9	~	~	0.06	0.06	100	100	65	50	100	100	65	50
2	KTA7-25S-0.25A	CA7-9	0.02	0.06	0.06	0.12	100	100	65	50	100	100	65	50
3	KTA7-25S-0.4A	CA7-9	0.06	0.09	0.12	0.18	100	100	65	50	100	100	65	50
4	KTA7-25S-0.63A	CA7-9	0.09	0.18	0.18	0.37	100	100	65	50	100	100	65	50
5	KTA7-25S-1.0A	CA7-9	0.12	0.25	0.37	0.55	100	100	65	50	100	100	65	50
6	KTA7-25S-1.6A	CA7-9	0.25	0.55	0.75	1.1	100	100	65	50	100	100	65	50
7	KTA7-25S-2.5A	CA7-9	0.55	0.75	1.1	1.8	100	65	50	8	65	50	50	8
8	KTA7-25S-4.0A	CA7-9	0.75	1.5	2.2	3	100	50	50	8	50	50	~	~
9	KTA7-25S-6.3A	CA7-9	1.5	2.2	3	4	100	50	50	4	50	50	~	~
10	KTA7-25S-10A	CA7-9	2.2	4	4	~	100	65	50	~	50	50	~	~
11	KTA7-25S-10A	CA7-12	2.2	4	5.5	5.5	100	65	50	4	50	50	50	~
--	KTA7-25S-10A	CA7-16	2.2	4	5.5	7.5	100	65	50	4	50	50	50	~
12	KTA7-25S-16A	CA7-12	4	5.5	~	~	100	65	~	~	50	50	~	~
--	KTA7-25S-16A	CA7-16	4	7.5	7.5	~	100	50	10	~	50	~	~	~
14	KTA7-25S-16A	CA7-23	4	7.5	10	10	100	50	10	3	50	50	~	~
15	KTA7-25S-20A	CA7-23	4	10	11	~	50	15	6	~	15	~	~	~
16	KTA7-25S-25A	CA7-23	6.3	11	13	~	50	15	6	~	15	~	~	~
17	KTA7-25H-2.5A	CA7-9	0.55	0.75	1.1	1.8	100	100	50	10	100	100	50	10
18	KTA7-25H-2.5A	CA7-23	0.55	0.75	1.1	1.8	100	100	50	10	100	100	50	10
19	KTA7-25H-4.0A	CA7-9	0.75	1.5	2.2	3	100	100	50	10	100	100	50	~
21	KTA7-25H-4.0A	CA7-23	0.75	1.5	2.2	3	100	100	50	50	100	100	50	50
22	KTA7-25H-6.3A	CA7-9	1.5	2.2	3	4	100	100	50	50	100	100	50	~
--	KTA7-25H-10A	CA7-9	2.2	4	4	~	100	65	50	~	100	65	~	~
24	KTA7-25H-10A	CA7-12	2.2	4	5.5	5.5	100	100	65	50	100	100	65	~
--	KTA7-25H-10A	CA7-16	2.2	4	5.5	7.5	100	100	65	50	100	100	65	50
--	KTA7-25H-16A	CA7-12	4	5.5	~	~	100	65	~	~	65	65	~	~
28	KTA7-25H-16A	CA7-16	4	7.5	7.5	~	100	65	50	~	65	65	50	~
--	KTA7-25H-16A	CA7-23	4	7.5	10	10	100	65	50	6	65	65	50	~
31	KTA7-25H-20A	CA7-23	4	10	11	~	65	65	25	~	65	65	25	~
33	KTA7-25H-25A	CA7-23	6.3	11	13	~	65	50	25	~	65	50	25	~
KTA7 + CA8 IEC Assemblies (CL8 / CLU8)														
1M	KTA7-25S-0.16A	CA8-09	~	0.02	~	~	100	65	65	65	65	65	~	~
2M	KTA7-25S-0.25A	CA8-09	0.02	0.06	0.06	~	100	65	65	65	65	65	~	~
3M	KTA7-25S-0.4A	CA8-09	0.06	0.09	0.12	~	100	65	65	65	65	65	~	~
4M	KTA7-25S-0.63A	CA8-09	0.09	0.18	0.18	~	100	65	65	65	65	65	~	~
5M	KTA7-25S-1.0A	CA8-09	0.12	0.25	0.37	~	100	65	65	65	65	65	~	~
6M	KTA7-25S-1.6A	CA8-09	0.25	0.55	0.75	~	100	65	65	10	65	65	~	~
7M	KTA7-25S-2.5A	CA8-09	0.55	0.75	1.1	~	100	65	65	8	65	65	~	~
8M	KTA7-25S-4.0A	CA8-09	0.75	1.5	2.2	~	100	65	65	8	50	50	~	~
9M	KTA7-25S-6.3A	CA8-09	1.5	2.2	2.2	~	100	65	65	4	~	~	~	~
10M	KTA7-25S-10A	CA8-09	2.2	4	4	~	100	65	65	4	~	~	~	~
11M	KTA7-25S-10A	CA8-12	2.2	4	4	~	100	65	65	4	~	~	~	~
12M	KTA7-25S-16A	CA8-12	4	5.5	~	~	100	50	50	3	~	~	~	~

Gray type indicates non-cataloged assembly. Contact your Sprecher+ Schuh representative for information.

❶ The ratings in these tables assume connection between components are made with Sprecher + Schuh Connection Modules. Engineering Practice allows wire connection as an alternative.

❷ kW ratings shown in the table are for reference. Final selection of the starter depends upon the actual motor full-load current and service factor.

Ecombo*Plus* Combination Starters

CK7-9...23

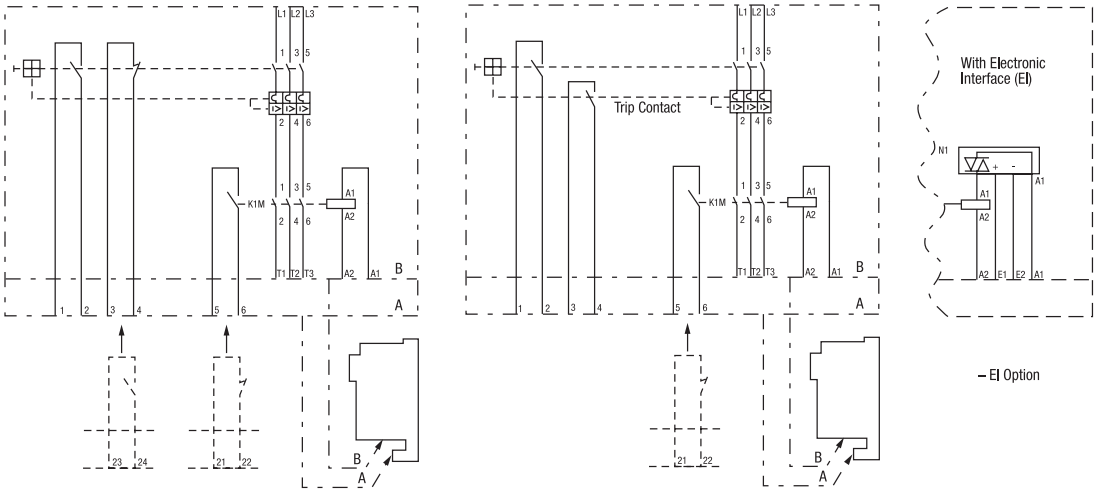

CK7-30...43

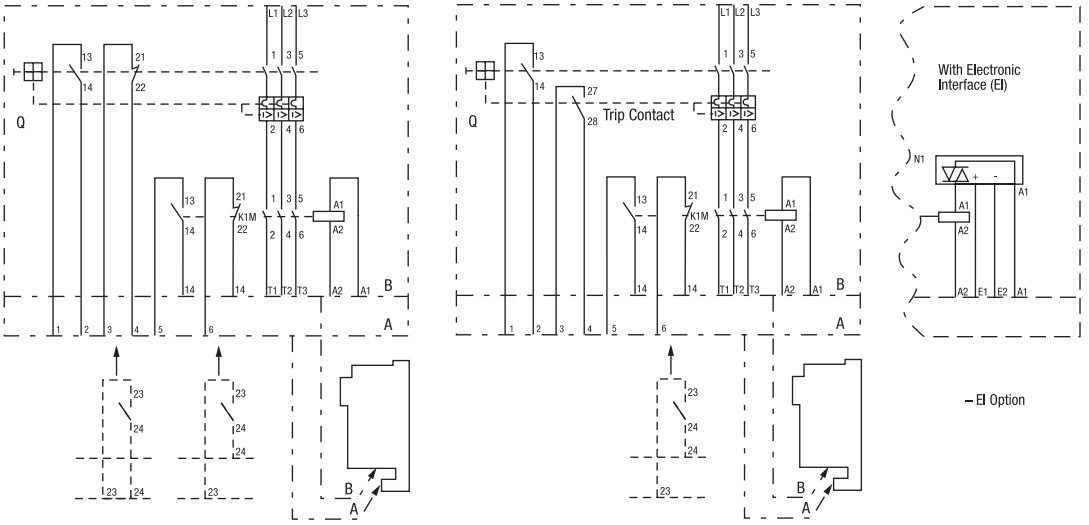

3-Component ECombo Starters

CLT7-9...43 Typical Diagram

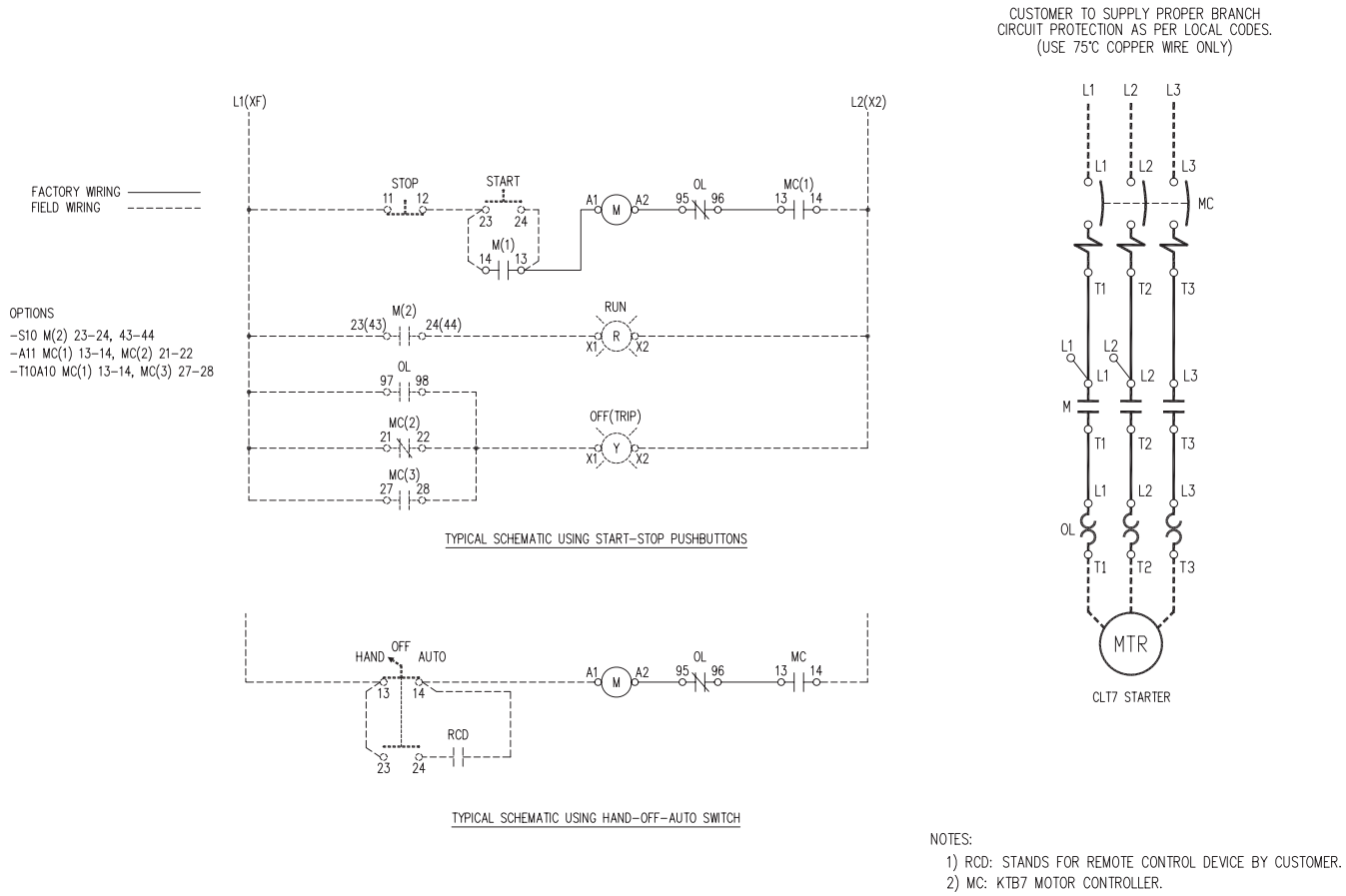

NOTES:
1) RCD: STANDS FOR REMOTE CONTROL DEVICE BY CUSTOMER.
2) MC: KTB7 MOTOR CONTROLLER.

Ecombo Combination Starters

CL8 and CLU8 Ecombo Starters with KT7-25S

Dimensions are in millimeters (inches). Dimensions not intended for manufacturing purposes.

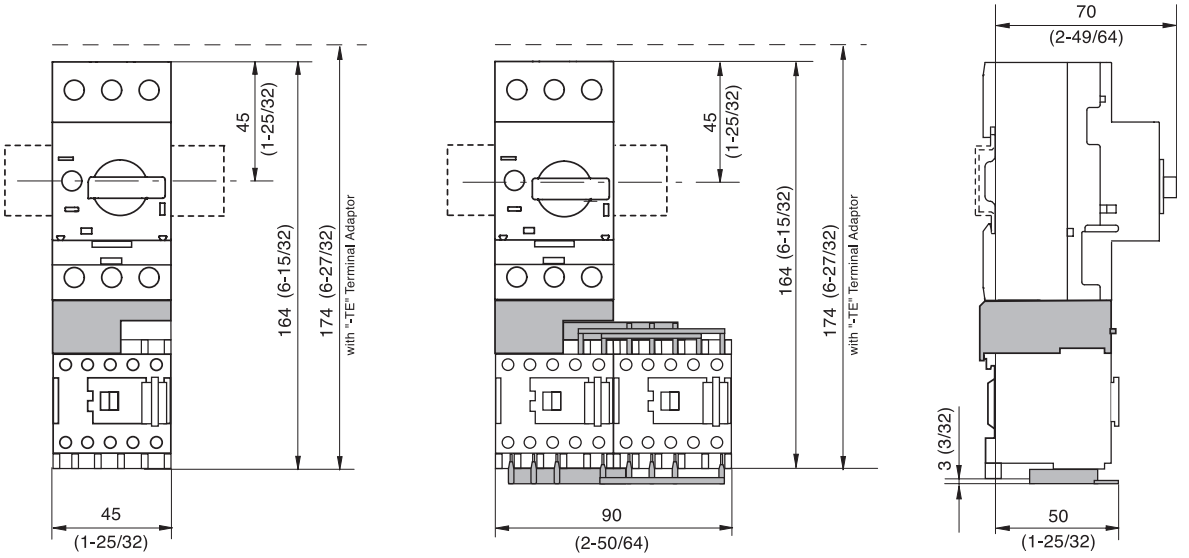

CL7-9…23(E) and CLU7-9…23(E) Ecombo Starters with KT7-25S

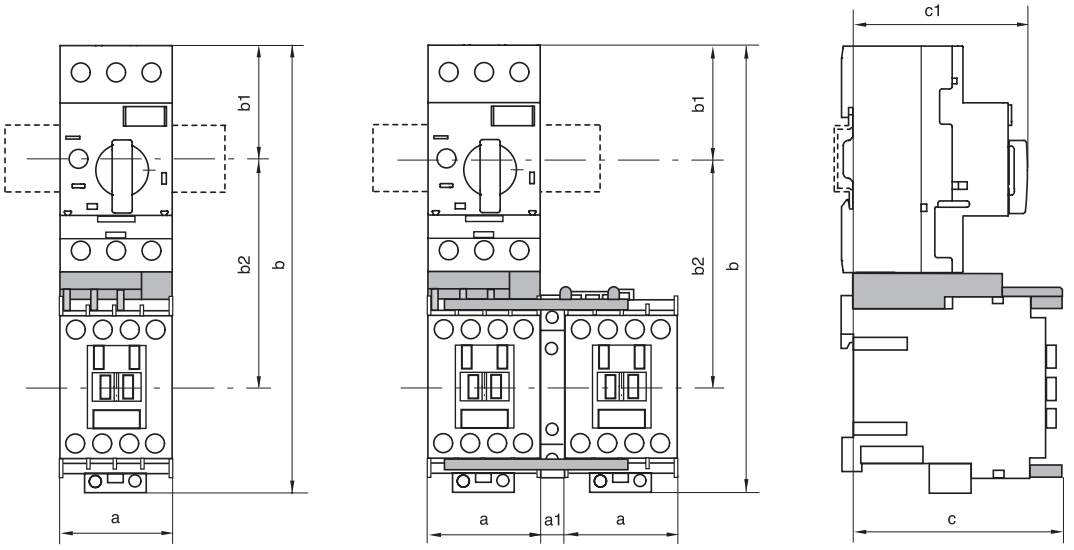

Catalog Number ❶	a	a1	b	b1	b2	c	c1
CL7-9(E)...CL7-23(E)	45 (1-25/32)	0	178 (7)	45 (1-25/32)	~	83.5 (3-19/64)	70 (2-49/64)
CL7-9(E)...CL7-23(E) with -TE Terminal Adaptor	45 (1-25/32)	0	188 (7-13/32)	55 (2-5/32)	~	83.5 (3-19/64)	70 (2-49/64)
CLU7-9(E)...CLU7-23(E)	45 (1-25/32)	10 (25/64)	178 (7)	45 (1-25/32)	~	83.5 (3-19/64)	70 (2-49/64)
CLU7-9(E)...CLU7-23(E) with -TE Terminal Adaptor	45 (1-25/32)	10 (25/64)	188 (7-13/32)	55 (2-5/32)	~	83.5 (3-19/64)	70 (2-49/64)

❶ Dimensions shown apply to AC coil contactors, or 12V or 24V Electronic DC coil contactors. Add 24 mm (1-25/32") to accomodate back pack on 36V…220V Electronic DC coils. See page A85 for details.

Ecombo Combination Starters

CL7-30…43(E) and CLU7-30…43(E) Ecombo Starters with KT7-45H

Dimensions are in millimeters (inches). Dimensions not intended for manufacturing purposes.

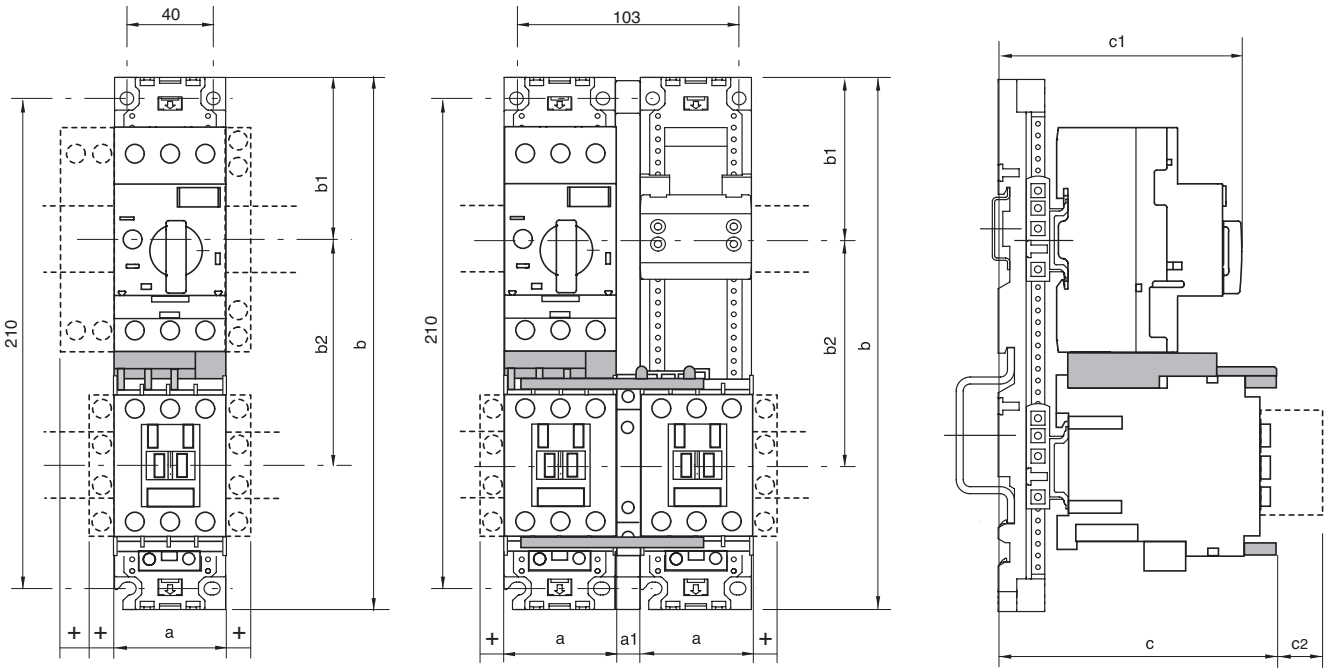

Catalog Number ❶❷	a	a1	b	b1	b2	c	c1	c2	+
CL7-30(E)	54 (2.125)	~	228 (8.97)	69 (2.72)	105 (4.30)	122.5 (4.82)	134.5 (5.29)	~	9
CL7-37(E)	54 (2.125)	~	228 (8.97)	69 (2.72)	105 (4.30)	122.5 (4.82)	134.5 (5.29)	~	9
CL7-43(E)	54 (2.125)	~	228 (8.97)	69 (2.72)	105 (4.30)	136 (5.35)	137 (5.39)	31 (1.22)	9
CLU7-30(E)	54 (2.125)	9	228 (8.97)	69 (2.72)	105 (4.30)	122.5 (4.82)	134.5 (5.29)	~	9
CLU7-37(E)	54 (2.125)	9	228 (8.97)	69 (2.72)	105 (4.30)	122.5 (4.82)	134.5 (5.29)	~	9
CLU7-43(E)	54 (2.125)	9	228 (8.97)	69 (2.72)	105 (4.30)	136 (5.35)	137 (5.39)	31 (1.22)	9

❶ CL7-30..43(E) and CLU7-30..43(E) include W-32490 Mounting Module. CLU7 includes W-32955 Spacer.
❷ Dimensions shown apply to AC coil contactors, or 12V or 24V Electronic DC coil contactors. Add 24 mm (1-25/32") to accomodate back pack on 36V…220V Electronic DC coils. See page A85 for details.

Ecombo*Plus* Combination Starters

CK7-9…23 and CKU7-9…23 Ecombo*Plus* Starters

Dimensions are in millimeters (inches). Dimensions not intended for manufacturing purposes.

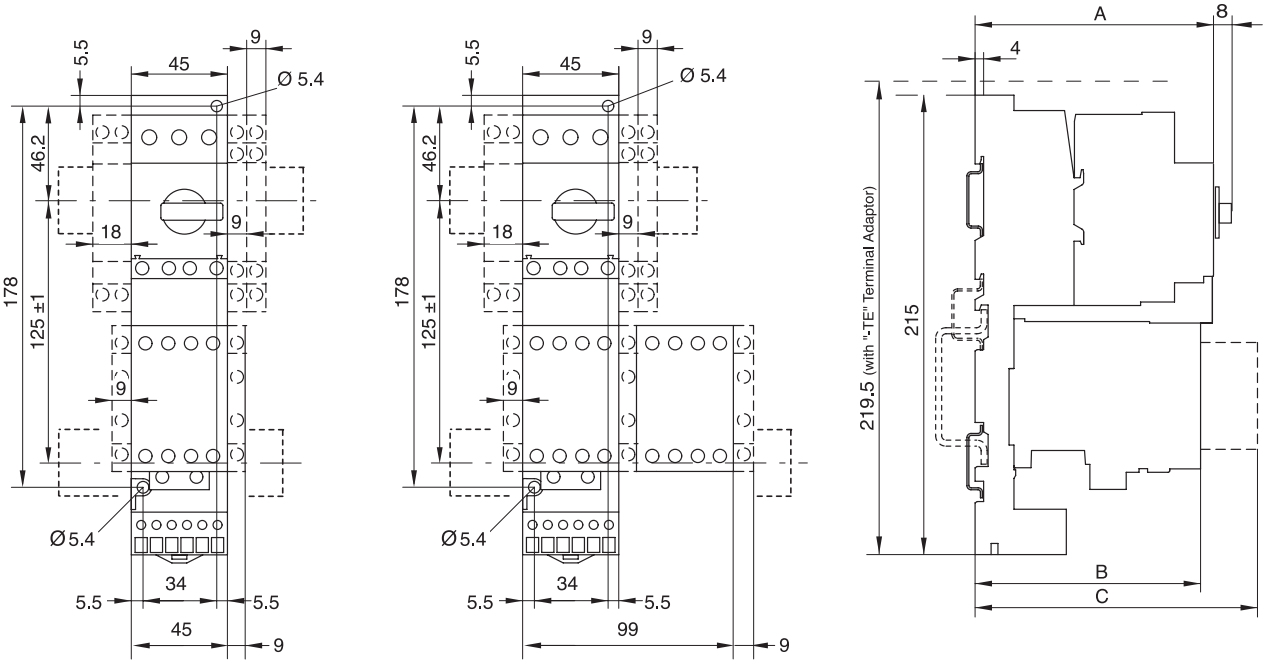

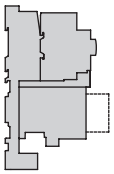	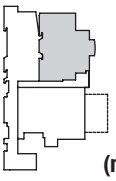	A (mm)	B (mm)	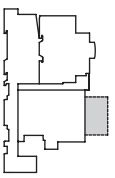	C (mm)
Direct on-line starters ❶					
CK7-9(E)	KT7-25S	112	107	CA7-PV, CS7-PV CZE-7, CZA7 CV7	138 157 160
CK7-12(E)					
CK7-16(E)	KT7-25H	122			
CK7-23(E)					
Reversing Starters					
CKU7-9	KT7-25S	112	107	CA7-PV, CS7-PV CZE7, CZA7 CV7	138 157 160
CKU7-12					
CKU7-16	KT7-25H	122			
CKU7-23					

❶ Dimensions shown apply to AC coil contactors, or 12V or 24V Electronic DC coil contactors. Add 24 mm (1-25/32") to accomodate back pack on 36V…220V Electronic DC coils. See page A85 for details.

Ecombo*Plus* Combination Starters

CK7-9…23

Dimensions are in millimeters (inches). Dimensions not intended for manufacturing purposes.

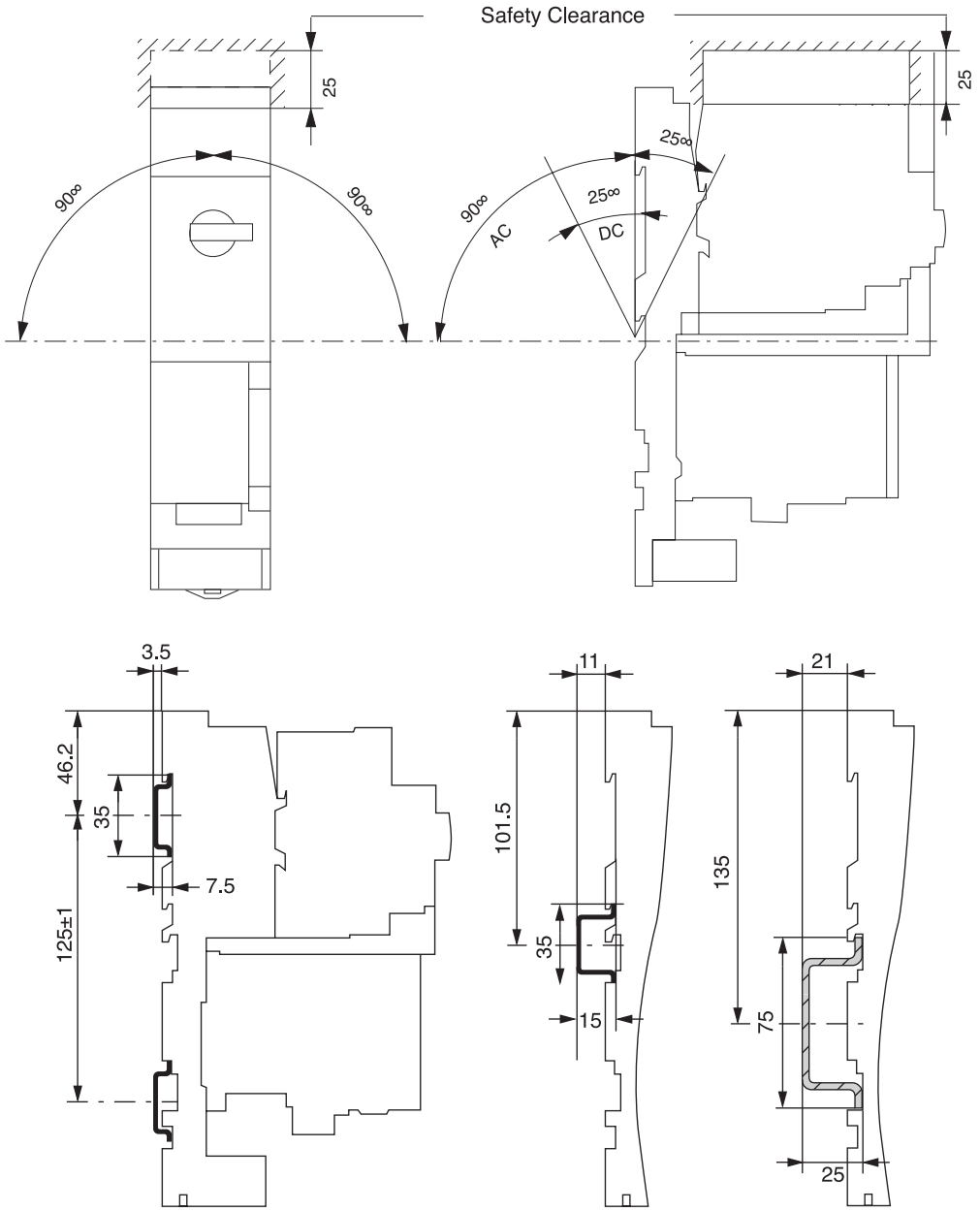

Ecombo*Plus* Combination Starters

CK7-30…37

Dimensions are in millimeters (inches). Dimensions not intended for manufacturing purposes.

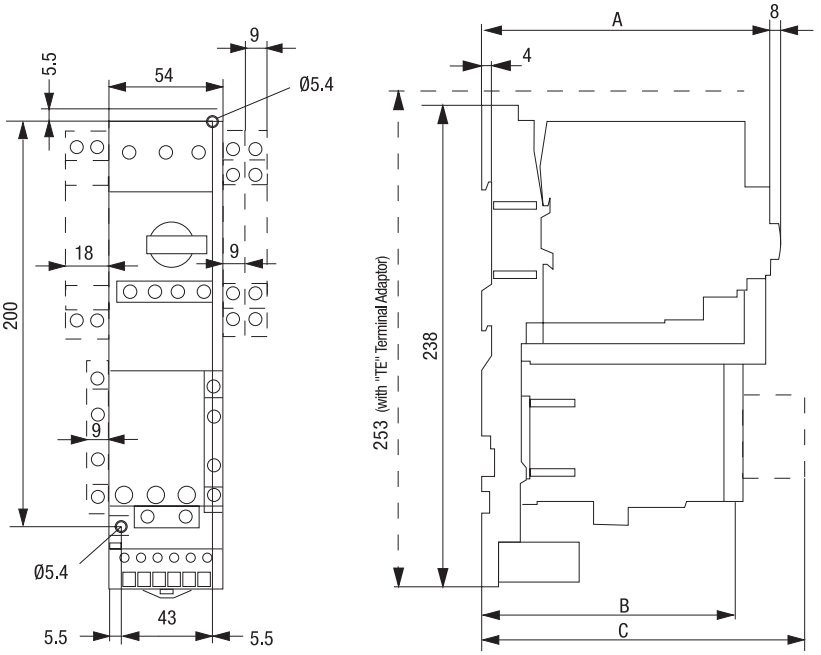

		A (mm)	B (mm)
CK7-30(E) ❶	KT7-45H	135	124
CK7-37(E) ❶			

❶ Dimensions shown apply to AC coil contactors, or 12V or 24V Electronic DC coil contactors. Add 24 mm (1-25/32") to accomodate back pack on 36V…220V Electronic DC coils. See page A85 for details.

	C (mm)
CA7-PV	154.5
CZE7	173.5
CV7	176.5

Ecombo*Plus* Combination Starters

CK7-43

Dimensions are in millimeters (inches). Dimensions not intended for manufacturing purposes.

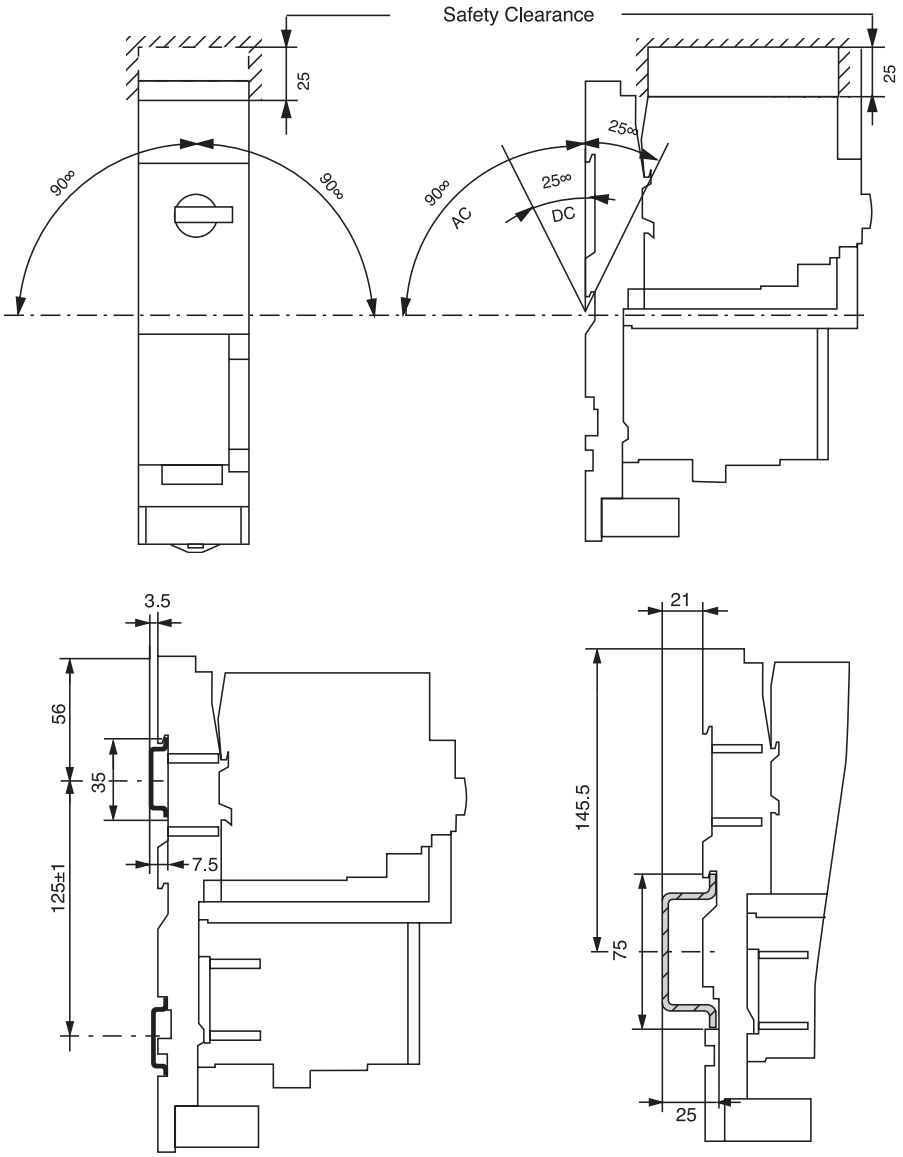

See previous page for dimensions A , B & C locations

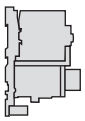		A (mm)	B (mm)
CK7-43(E) ❶	KT7-45H	135	118.5

❶ Dimensions shown apply to AC coil contactors, or 12V or 24V Electronic DC coil contactors. Add 24 mm (1-25/32") to accomodate back pack on 36V…220V Electronic DC coils. See page A85 for details.

	C (mm)
CA7-PV	157
CZE7	176
CV7	179

Non-Reversing Three Component Combination Starters ❸

KTB7-25S + CA7-9...23 + CEP7-D/E

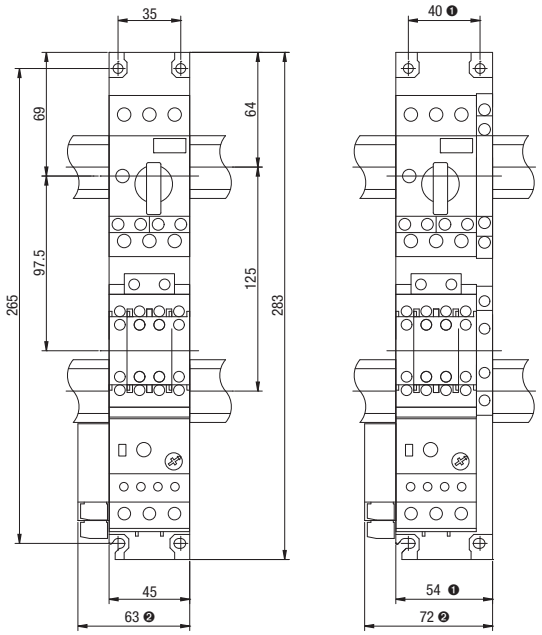

KTB7-25H + CA7-30...37 + CEP7-D/E

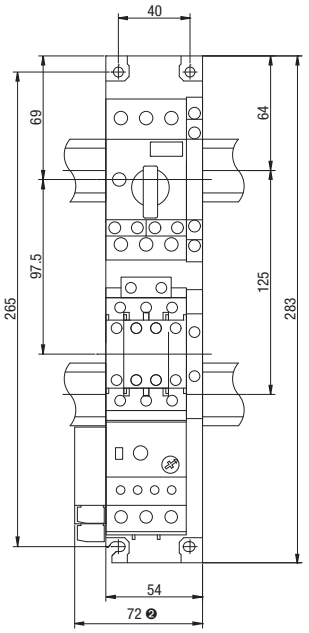

KTB7-45H + CA7-30...37 + CEP7-D/E

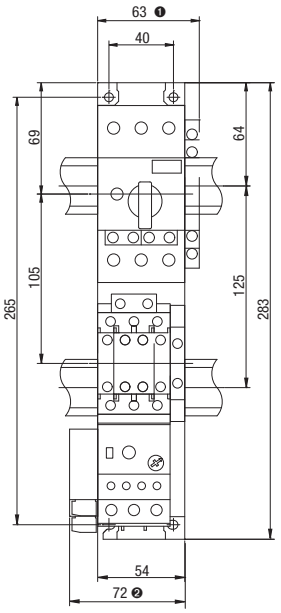

KTB7-45H + CA7-43 + CEP7-E

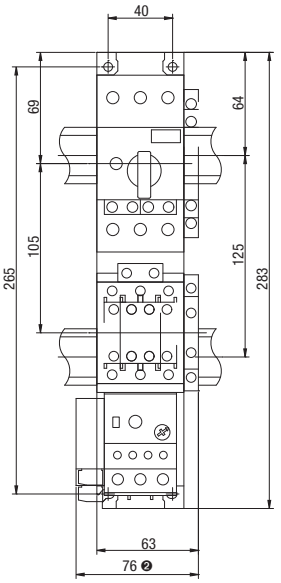

Dimensions are in millimeters (inches). Dimensions not intended for manufacturing purposes.

❶ With additional side mount auxiliary or trip contact(s)
❷ With CEP7-E* Side Mount Modules
❸ Dimensions shown apply to AC coil contactors, or 12V or 24V Electronic DC coil contactors. Add 24 mm (1-25/32") to accomodate back pack on 36V…220V Electronic DC coils. See page A85 for details.

Reversing Three Component Combination Starters ❷

KTB7-25S + CAU7-9...37 + CEP7-D/E

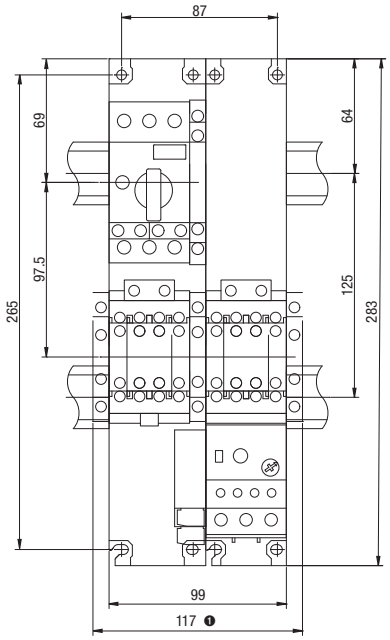

KTB7-45H + CA7-30...37 + CEP7-D/E

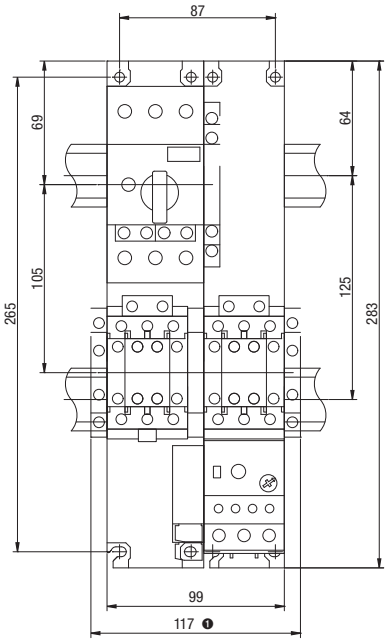

KTB7-45H + CA7-43 + CEP7-E

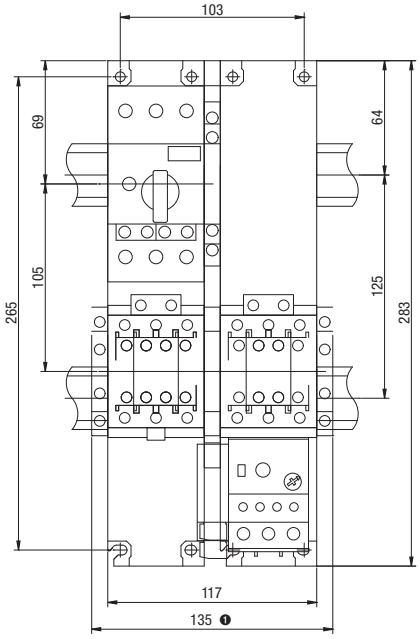

Dimensions are in millimeters (inches). Dimensions not intended for manufacturing purposes.

❶ With additional side mount auxiliary contact(s)
❷ Dimensions shown apply to AC coil contactors, or 12V or 24V Electronic DC coil contactors. Add 24 mm (1-25/32”) to accomodate back pack on 36V…220V Electronic DC coils. See page A85 for details.

Enclosed Motor Controllers
and Molded Case Circuit Breakers

KTA7 Type-E Self Protected Manual Motor Controllers
Page F87

Explosion-Proof Motor Controllers

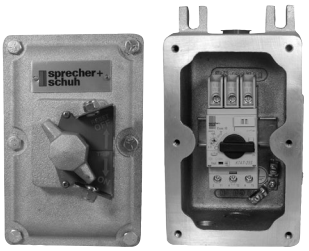

KTA7_EX
Page F91

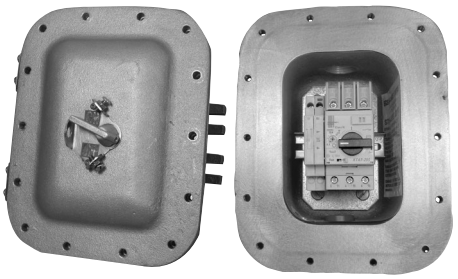

KTA7_EZ
Page F92

The following pages contain a selection of single enclosed KTA7 & KTC7 motor controllers which can be applied as an individual Manual Self-Protected Combination Motor Controller or as an individual Manual Motor Starter dependent on the ratings of the individual unit.

- A Self-protected Combination Motor Controller (UL508 Construction Type E) performs all the functions of a Manual Combo starter including a UL approved means "Disconnect" with lockable and defeatable handle mechanism, short-circuit protection and overload protection for motor applications.
- A UL508 Manual Motor Controller is a manual motor starter including a motor disconnect combined with an overload relay.

Both can be combined with auxiliary contacts, shunt-trip or under-voltage trip units to meet your application requirements. The section that follows includes non-metallic enclosures, metallic enclosures and explosion-proof enclosures.

Enclosed Molded Case Circuit Breakers

The following pages contain a selection of individual enclosed KTU7 molded case circuit breakers for the protection of non-motor loads. KTU7 is a 480Y/277Volt or 600Y/347 volt UL489 approved circuit breaker and the selection of enclosures or combined with matching environmentally approved thru-the-door handle disconnect mechanism which also complies with UL489 standards. KTU7 offers at least 65 KAIC withstand ratings which exceeds those offered by many 600 Volt Class Molded Case Circuit Breakers which are larger and more expensive. Enclosed KTU7 can be combined with auxiliary contacts, shunt-trip or under-voltage trip units to meet your application requirements.

KTU7 Molded Case Circuit Breakers
Page F93

Enclosed Type E/F Combination Starters

KTA7 or KTC7 can be applied in combination with a CA7 contactor for remote control and an enclosure with matching environmentally approved thru-the-door handle disconnect mechanism to meet all requirements for a Construction Type E or F Combination Starter. The following pages contain a selection of individual Combo starters which are smaller and a less expensive than Classic Construction Type A (Fusible), or Type C (Thermal-magnetic Molded Case Circuit Breaker) as offered in Section C of this catalog. The following types are offered:

CX7 Ecombo KWIKStarters
Page F96

- Non-metallic enclosed Combo KwikStarter CX7 and CXU7 with AC or DC coils available as factory assembled or in kit form for field assembly
- Metallic enclosed Combo CX7 and CXU7with AC or DC coils
- Explosion-proof enclosed CX7 and CXU7with AC or DC coils

A variety of modifications are available.

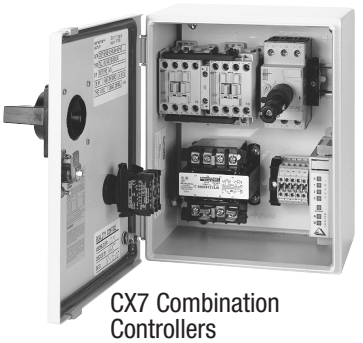

CX7 Combination Controllers
Page F103

Enclosed KTA7 - IP65

Non-metallic (IP65) Enclosure

Amp / Horsepower Rating										
Max. Horsepower ❶❷❸						O/L Relay Ampere Range	Magnetic Response Current	Catalog Number ❹	Price	Dimension Code
Single Phase		Three Phase								
115V	230V	200V	230V	460V	575V					
KTA7-25S/32S Standard Interrupting Capacity										
~	~	~	~	~	~	0.10…0.16	2.1	KTA7-25S-0.16A-CG	399	AY
~	~	~	~	~	~	0.16…0.25	3.3	KTA7-25S-0.25A-CG	399	AY
~	~	~	~	~	~	0.25…0.40	5.2	KTA7-25S-0.4A-CG	399	AY
~	~	~	~	~	~	0.40…0.63	8.2	KTA7-25S-0.63A-CG	434	AY
~	~	~	~	~	1/2	0.63…1.0	13	KTA7-25S-1.0A-CG	434	AY
~	1/10	~	~	1/2	3/4	1.0…1.6	21	KTA7-25S-1.6A-CG	434	AY
1/10	1/6	1/2	1/2	1	1-1/2	1.6…2.5	33	KTA7-25S-2.5A-CG	434	AY
1/8	1/3	3/4	3/4	2	3	2.5…4	52	KTA7-25S-4.0A-CG	434	AY
1/4	1/2	1	1-1/2	3	5 ❻	4…6.3	82	KTA7-25S-6.3A-CG	434	AY
1/2	1-1/2	2	3	5	7-1/2❻	6.3…10	130	KTA7-25S-10A-CG	434	AY
1	2	3	~	10	10 ❻	10…16	208	KTA7-25S-16A-CG	471	AY
1-1/2	3	5	5	~	15 ❻	14.5…20	260	KTA7-25S-20A-CG	471	AY
2	3	7-1/2❻	7-1/2❻	15 ❻	20 ❻	18…25	325	KTA7-25S-25A-CG ❻	471	AY
2	5	7-1/2❻	10 ❻	20 ❻	25 ❻	24…29	409	KTA7-32S-29A-CG ❻	581	AY
2	5	7-1/2❻	10 ❻	25 ❻	30 ❻	27…32	448	KTA7-32S-32A-CG ❻	581	AY

Includes:

- Non-metallic (IP65) enclosure with integrated IP65 operator – watertight, dusttight
- KT7-25S/32S (Standard Interrupting Capacity) "Type E" Self-protected Combination Manual Controller ❺
- Terminal Adaptor for Type E Applications (Cat.# KT7-25-TE)
- Gray and black IP65 handle ❹❺

Enclosure Only

Description	Catalog Number	Price
Gray/Black handle	KT7-AYTG2	151
Red/Yellow handle	KT7-AYTJ2	151
Accessory		
Ground (PE) Terminal	KS7-AYMTN	8

Modifications (Factory Assembled)

Description	Add Suffix to Cat. Number	Price Adder
KT7 Auxiliaries & Trip Contacts, Front Mount 300V max.		
1 NO Auxiliary	-A10	62
1 NC Auxiliary	-A01	62
1 NO + 1 NC Auxiliary	-A11	69
2 NO Auxiliaries	-A20	69
1 NO SC+OL + 1 NC Auxiliary	-T10A01	86
1 NO SC+OL + 1 NO Auxiliary	-T10A10	86
Side Mount 600V max.		
2 NC Auxiliaries	-AS02	79
2 NO Auxiliaries	-AS20	79
1 NO + 1 NC Auxiliary	-AS11	79
Additional KT7 Trip Contacts, Side Mount 600V max.		
1 NO SC+OL+1 NO SC	-R00	94
1 NO SC+OL+1 NC SC	-R01	94
1 NC SC+OL+1 NO SC	-R10	94
Accessories		
Undervoltage Release Module	-UA-✱	126
Shunt Release Module	-AA-✱	126

This item is available in the ORANGE EXPRESS 3-day shipping program

-UA..-AA Coil Codes (✱)

AC Coil Code	Voltage Range 50 Hz	Voltage Range 60 Hz
24V	21V	24V
28V	24V	28V
120V	**105V**	**120V**
127V	110V	127V
230V	220...230V	~
240V	~	240...260V
277V	240V	277V
460V	380...400V	400...460V
480V	415V	480V
600V	550V	600V

❶ **Horsepower ratings shown in the table above are for reference.** ***The final selection of the manual starter depends on the actual motor full load current and service factor.***

- For motor with service factor less than 1.15. Use motor nameplate full load current times 0.9 and choose the motor starter with the appropriate current range. Example: Motor FLC = 4.2A; S.F. = 1.0. 4.2A x 0.9 = 3.78A. Select catalog number KTA7-25S-4.0A.

❷ Magnetic trip is fixed at 13x the maximum value of the current adjustment range. Refer to page F5 for applied KAIC ratings.

❸ KTA7 may be applied to single phase loads if 3 poles of device are wired in series. See footnote 1 for device selection criteria.

❹ A red and yellow handle may be selected instead of the standard gray and black handle. Change "CG" suffix to "CJ". Ex: Change KTA7-25S-0.16-**CG** to KTA7-25S-0.16-**CJ**.

❺ Handles are built-in to the enclosure and are not available as components.

❻ Catalog numbers and/or specific voltages (i.e. @ 575V) shaded in gray are suitable for use as a manual motor starter only because they are not Type E rated. See page F5 for ratings.

Enclosed KTA7 - Type 4 / 4X / 12

Amp / Horsepower Rating

Non-metallic, Type 4 / 4X / 12 Enclosure

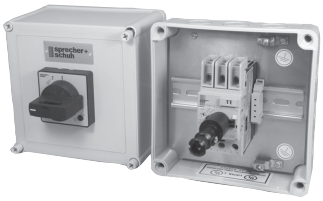

Max. Horsepower ❶❷❸						O/L Relay Ampere Range	Magnetic Response Current	Catalog Number ❹	Price	Dimension Code
Single Phase		Three Phase								
115V	230V	200V	230V	460V	575V					
KTA7-25S/32S Standard Interrupting Capacity										
~	~	~	~	~	~	0.10…0.16	2.1	KTA7-25S-0.16A-VG	586	Q5
~	~	~	~	~	~	0.16…0.25	3.3	KTA7-25S-0.25A-VG	586	Q5
~	~	~	~	~	~	0.25…0.40	5.2	KTA7-25S-0.4A-VG	586	Q5
~	~	~	~	~	~	0.40…0.63	8.2	KTA7-25S-0.63A-VG	611	Q5
~	~	~	~	~	1/2	0.63…1.0	13	KTA7-25S-1.0A-VG	611	Q5
~	1/10	~	~	1/2	3/4	1.0…1.6	21	KTA7-25S-1.6A-VG	611	Q5
1/10	1/6	1/2	1/2	1	1-1/2	1.6…2.5	33	KTA7-25S-2.5A-VG	611	Q5
1/8	1/3	3/4	3/4	2	3	2.5…4	52	KTA7-25S-4.0A-VG	611	Q5
1/4	1/2	1	1-1/2	3	5 ❺	4…6.3	82	KTA7-25S-6.3A-VG	611	Q5
1/2	1-1/2	2	3	5	7-1/2 ❺	6.3…10	130	KTA7-25S-10A-VG	611	Q5
1	2	3	~	10	10 ❺	10…16	208	KTA7-25S-16A-VG	657	Q5
1-1/2	3	5	5	~	15 ❺	14.5…20	260	KTA7-25S-20A-VG	657	Q5
2	3	7-1/2❺	7-1/2 ❺	15 ❺	20 ❺	18…25	325	KTA7-25S-25A-VG ❺	657	Q5
2	5	7-1/2 ❺	10 ❺	20 ❺	25 ❺	24…29	406	KTA7-32S-29A-VG ❺	767	Q5
2	5	7-1/2 ❺	10 ❺	25 ❺	30 ❺	27…32	448	KTA7-32S-32A-VG ❺	767	Q5
KTA7-25H/32H High Interrupting Capacity										
1/10	1/6	1/2	1/2	1	1-1/2	1.6…2.5	33	KTA7-25H-2.5A-VG	683	Q6
1/8	1/3	3/4	3/4	2	3	2.5…4	52	KTA7-25H-4.0A-VG	683	Q6
1/4	1/2	1	1-1/2	3	5	4…6.3	82	KTA7-25H-6.3A-VG	683	Q6
1/2	1-1/2	2	3	5	7-1/2	6.3…10	130	KTA7-25H-10A-VG	729	Q6
1	2	3	~	10	10	10…16	208	KTA7-25H-16A-VG	729	Q6
1-1/2	3	5	5	~	15 ❺	14.5…20	260	KTA7-25H-20A-VG	729	Q6
2	3	7-1/2	7-1/2	15	20 ❺	18…25	325	KTA7-25H-25A-VG	729	Q6
2	5	7-1/2 ❺	10 ❺	20 ❺	25 ❺	24…29	406	KTA7-32H-29A-VG ❺	871	Q6
2	5	7-1/2 ❺	10 ❺	25 ❺	30 ❺	27…32	448	KTA7-32H-32A-VG ❺	871	Q6
KTA7-45H High Interrupting Capacity										
1/2	1-1/2	2	3	5	7-1/2	6.3…10	130	KTA7-45H-10A-VG	1350	Q7
1	2	3	~	10	10	10…16	208	KTA7-45H-16A-VG	1350	Q7
1-1/2	3	5	5	~	15	14.5…20	260	KTA7-45H-20A-VG	1350	Q7
2	3	~	7-1/2	20	20	18…25	325	KTA7-45H-25A-VG	1350	Q7
2	5	7-1/2	10	20	30	23…32	416	KTA7-45H-32A-VG	1414	Q7
3	7-1/2	10	15	30	40 ❺	32…45	585	KTA7-45H-45A-VG	1414	Q7

Includes:

- Type 4 / 4X / 12 enclosure – watertight, dusttight, corrosion resistant
- KTA7 "Type E" Self-protected Combination Manual Controller (Standard Interrupting Capacity) ❺
- Terminal Adaptor for Type E Applications (Cat.# KT7-25[45]-TE)
- Gray and black Type 4/4X/12; IP66 handle (Cat.# KT7-HTN) ❹

Modifications (Factory Assembled)

Description	Add Suffix to Cat. Number	Price Adder
KT7 Auxiliaries & Trip Contacts, Front Mount 300V max.		
1 NO Auxiliary	-A10	62
1 NC Auxiliary	-A01	62
1 NO + 1 NC Auxiliary	-A11	69
2 NO Auxiliaries	-A20	69
1 NO SC+OL + 1 NC Auxiliary	-T10A01	86
1 NO SC+OL + 1 NO Auxiliary	-T10A10	86
Side Mount 600V max.		
2 NC Auxiliaries	-AS02	79
2 NO Auxiliaries	-AS20	79
1 NO + 1 NC Auxiliary	-AS11	79
Additional KT7 Trip Contacts, Side Mount 600V max.		
1 NO SC+OL+1 NO SC	-R00	94
1 NO SC+OL+1 NC SC	-R01	94
1 NC SC+OL+1 NO SC	-R10	94
Accessories		
Undervoltage Release Module	-UA-✱	126
Shunt Release Module	-AA-✱	126

-UA..-AA Coil Codes (✱)

AC Coil Code	Voltage Range 50 Hz	Voltage Range 60 Hz
24V	21V	24V
28V	24V	28V
120V	**105V**	**120V**
127V	110V	127V
230V	220...230V	~
240V	~	240...260V
277V	240V	277V
460V	380...400V	400...460V
480V	415V	480V
600V	550V	600V

This item is available in the ORANGE EXPRESS 3-day shipping program

❶ **Horsepower ratings shown in the table above are for reference.** ***The final selection of the manual starter depends on the actual motor full load current and service factor.***

- For motor with service factor less than 1.15. Use motor nameplate full load current times 0.9 and choose the motor starter with the appropriate current range. Example: Motor FLC = 4.2A; S.F. = 1.0. 4.2A x 0.9 = 3.78A. Select catalog number KTA7-25S-4.0A.

❷ Magnetic trip is fixed at 13x the maximum value of the current adjustment range. Refer to page F5 for applied KAIC ratings.

❸ KTA7 may be applied to single phase loads if 3 poles of device are wired in series. See footnote 1 for device selection criteria.

❹ A red and yellow handle may be selected instead of the standard gray and black handle. Change "VG" suffix to "VJ". Ex: Change KTA7-25S-0.16-**VG** to KTA7-25S-0.16-**VJ**.

❺ Catalog numbers and/or specific voltages (i.e. @ 575V) shaded in gray are suitable for use as a manual motor starter only because they are not Type E rated. See page F5 for ratings.

Enclosed KTA7 - Type 12

Painted Steel, Type 12 Enclosure

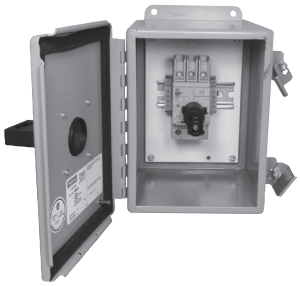

Amp / Horsepower Rating										
Max. Horsepower ❶❷❸						O/L Relay Ampere Range	Magnetic Response Current	Catalog Number ❹	Price	Dimension Code
Single Phase		Three Phase								
115V	230V	200V	230V	460V	575V					
KTA7-25S/32S Standard Interrupting Capacity										
~	~	~	~	~	~	0.10…0.16	2.1	KTA7-25S-0.16A-DG	628	L
~	~	~	~	~	~	0.16…0.25	3.3	KTA7-25S-0.25A-DG	628	L
~	~	~	~	~	~	0.25…0.40	5.2	KTA7-25S-0.4A-DG	628	L
~	~	~	~	~	~	0.40…0.63	8.2	KTA7-25S-0.63A-DG	662	L
~	~	~	~	~	1/2	0.63…1.0	13	KTA7-25S-1.0A-DG	662	L
~	1/10	~	~	1/2	3/4	1.0…1.6	21	KTA7-25S-1.6A-DG	662	L
1/10	1/6	1/2	1/2	1	1-1/2	1.6…2.5	33	KTA7-25S-2.5A-DG	662	L
1/8	1/3	3/4	3/4	2	3	2.5…4	52	KTA7-25S-4.0A-DG	662	L
1/4	1/2	1	1-1/2	3	5 ❺	4…6.3	82	KTA7-25S-6.3A-DG	662	L
1/2	1-1/2	2	3	5	7-1/2 ❺	6.3…10	130	KTA7-25S-10A-DG	662	L
1	2	3	~	10	10 ❺	10…16	208	KTA7-25S-16A-DG	662	L
1-1/2	3	5	5	~	15 ❺	14.5…20	260	KTA7-25S-20A-DG	698	L
2	3	7-1/2 ❺	7-1/2 ❺	15 ❺	20 ❺	18…25	325	KTA7-25S-25A-DG ❺	698	L
2	5	7-1/2 ❺	10 ❺	20 ❺	25 ❺	24…29	406	KTA7-32S-29A-DG ❺	808	L
2	5	7-1/2 ❺	10 ❺	25 ❺	30 ❺	27…32	448	KTA7-32S-32A-DG ❺	808	L
KTA7-25H/32H High Interrupting Capacity										
1/10	1/6	1/2	1/2	1	1-1/2	1.6…2.5	33	KTA7-25H-2.5A-DG	725	L
1/8	1/3	3/4	3/4	2	3	2.5…4	52	KTA7-25H-4.0A-DG	725	L
1/4	1/2	1	1-1/2	3	5	4…6.3	82	KTA7-25H-6.3A-DG	725	L
1/2	1-1/2	2	3	5	7-1/2	6.3…10	130	KTA7-25H-10A-DG	771	L
1	2	3	~	10	10	10…16	208	KTA7-25H-16A-DG	771	L
1-1/2	3	5	5	~	15 ❺	14.5…20	260	KTA7-25H-20A-DG	771	L
2	3	7-1/2	7-1/2	15	20 ❺	18…25	325	KTA7-25H-25A-DG	771	L
2	5	7-1/2 ❺	10 ❺	20 ❺	25 ❺	24…29	406	KTA7-32H-29A-DG ❺	913	L
2	5	7-1/2 ❺	10 ❺	25 ❺	30 ❺	27…32	448	KTA7-32H-32A-DG ❺	913	L

Includes:

- Type 12 enclosure – dusttight
- KT7-25S/32S (Standard Interrupting Capacity) "Type E" Self-protected Combination Manual Controller ❺
- Terminal Adaptor for Type E Applications (Cat.# KT7-25-TE)
- Gray and black Type 4/4X/12; IP66 handle (Cat.# KT7-HTN) ❹

Modifications (Factory Assembled)

Description	Add Suffix to Cat. Number	Price Adder
KT7 Auxiliaries & Trip Contacts, Front Mount 300V max.		
1 NO Auxiliary	-A10	62
1 NC Auxiliary	-A01	62
1 NO + 1 NC Auxiliary	-A11	69
2 NO Auxiliaries	-A20	69
1 NO SC+OL + 1 NC Auxiliary	-T10A01	86
1 NO SC+OL + 1 NO Auxiliary	-T10A10	86
Side Mount 600V max.		
2 NC Auxiliaries	-AS02	79
2 NO Auxiliaries	-AS20	79
1 NO + 1 NC Auxiliary	-AS11	79
Additional KT7 Trip Contacts, Side Mount 600V max.		
1 NO SC+OL+1 NO SC	-R00	94
1 NO SC+OL+1 NC SC	-R01	94
1 NC SC+OL+1 NO SC	-R10	94
Accessories		
Undervoltage Release Module	-UA-✱	126
Shunt Release Module	-AA-✱	126

-UA..-AA Coil Codes (✱)

AC Coil Code	Voltage Range 50 Hz	Voltage Range 60 Hz
24V	21V	24V
28V	24V	28V
120V	**105V**	**120V**
127V	110V	127V
230V	220...230V	~
240V	~	240...260V
277V	240V	277V
460V	380...400V	400...460V
480V	415V	480V
600V	550V	600V

This item is available in the ORANGE EXPRESS 3-day shipping program

❶ **Horsepower ratings shown in the table above are for reference.** ***The final selection of the manual starter depends on the actual motor full load current and service factor.***

- For motor with service factor less than 1.15. Use motor nameplate full load current times 0.9 and choose the motor starter with the appropriate current range. Example: Motor FLC = 4.2A; S.F. = 1.0. 4.2A x 0.9 = 3.78A. Select catalog number KTA7-25S-4.0A.

❷ Magnetic trip is fixed at 13x the maximum value of the current adjustment range. Refer to page F5 for applied KAIC ratings.

❸ KTA7 may be applied to single phase loads if 3 poles of device are wired in series. See footnote 1 for device selection criteria.

❹ A red and yellow handle may be selected instead of the standard gray and black handle. Change "DG" suffix to "DJ". Ex: Change KTA7-25S-0.16-**DG** to KTA7-25S-0.16-**DJ**.

❺ Catalog numbers and/or specific voltages (i.e. @ 575V) shaded in gray are suitable for use as a manual motor starter only because they are not Type E rated. See page F5 for ratings.

Enclosed KTA7 - Type 4 / 12

Amp / Horsepower Rating

Painted Steel, Type 4 / 12 Enclosure

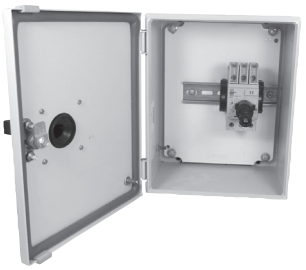

Max. Horsepower ❶❷❸						O/L Relay Ampere Range	Magnetic Response Current	Catalog Number ❹	Price	Dimension Code
Single Phase		Three Phase								
115V	230V	200V	230V	460V	575V					
KTA7-25S/32S Standard Interrupting Capacity										
~	~	~	~	~	~	0.10…0.16	2.1	**KTA7-25S-0.16A-WG**	**698**	W6
~	~	~	~	~	~	0.16…0.25	3.3	**KTA7-25S-0.25A-WG**	**698**	W6
~	~	~	~	~	~	0.25…0.40	5.2	**KTA7-25S-0.4A-WG**	**698**	W6
~	~	~	~	~	~	0.40…0.63	8.2	**KTA7-25S-0.63A-WG**	**732**	W6
~	~	~	~	~	1/2	0.63…1.0	13	**KTA7-25S-1.0A-WG**	**732**	W6
~	1/10	~	~	1/2	3/4	1.0…1.6	21	**KTA7-25S-1.6A-WG**	**732**	W6
1/10	1/6	1/2	1/2	1	1-1/2	1.6…2.5	33	**KTA7-25S-2.5A-WG**	**732**	W6
1/8	1/3	3/4	3/4	2	3	2.5…4	52	**KTA7-25S-4.0A-WG**	**732**	W6
1/4	1/2	1	1-1/2	3	5 ❺	4…6.3	82	**KTA7-25S-6.3A-WG**	**732**	W6
1/2	1-1/2	2	3	5	7-1/2 ❺	6.3…10	130	**KTA7-25S-10A-WG**	**732**	W6
1	2	3	~	10	10 ❺	10…16	208	**KTA7-25S-16A-WG**	**769**	W6
1-1/2	3	5	5	~	15 ❺	14.5…20	260	**KTA7-25S-20A-WG**	**769**	W6
2	3	7-1/2 ❺	7-1/2 ❺	15 ❺	20 ❺	18…25	325	**KTA7-25S-25A-WG ❺**	**769**	W6
2	5	7-1/2 ❺	10 ❺	20 ❺	25 ❺	24…29	406	**KTA7-32S-29A-WG ❺**	**879**	W6
2	5	7-1/2 ❺	10 ❺	25 ❺	30 ❺	27…32	448	**KTA7-32S-32A-WG ❺**	**879**	W6
KTA7-25H/32H High Interrupting Capacity										
1/10	1/6	1/2	1/2	1	1-1/2	1.6…2.5	33	**KTA7-25H-2.5A-WG**	**796**	W6
1/8	1/3	3/4	3/4	2	3	2.5…4	52	**KTA7-25H-4.0A-WG**	**796**	W6
1/4	1/2	1	1-1/2	3	5	4…6.3	82	**KTA7-25H-6.3A-WG**	**796**	W6
1/2	1-1/2	2	3	5	7-1/2	6.3…10	130	**KTA7-25H-10A-WG**	**841**	W6
1	2	3	~	10	10	10…16	208	**KTA7-25H-16A-WG**	**841**	W6
1-1/2	3	5	5	~	15 ❺	14.5…20	260	**KTA7-25H-20A-WG**	**841**	W6
2	3	7-1/2	7-1/2	15	20 ❺	18…25	325	**KTA7-25H-25A-WG**	**841**	W6
2	5	7-1/2 ❺	10 ❺	20 ❺	25 ❺	24…29	406	**KTA7-32H-29A-WG ❺**	**983**	W6
2	5	7-1/2 ❺	10 ❺	25 ❺	30 ❺	27…32	448	**KTA7-32H-32A-WG ❺**	**983**	W6
KTA7-45H High Interrupting Capacity										
1/2	1-1/2	2	3	5	7-1/2	6.3…10	130	**KTA7-45H-10A-WG**	**1124**	R/F
1	2	3	~	10	10	10…16	208	**KTA7-45H-16A-WG**	**1124**	R/F
1-1/2	3	5	5	~	15	14.5…20	260	**KTA7-45H-20A-WG**	**1124**	R/F
2	3	~	7-1/2	20	20	18…25	325	**KTA7-45H-25A-WG**	**1124**	R/F
2	5	7-1/2	10	20	30	23…32	416	**KTA7-45H-32A-WG**	**1188**	R/F
3	7-1/2	10	15	30	40 ❺	32…45	585	**KTA7-45H-45A-WG**	**1188**	R/F

Includes:

- Type 4 / 12 enclosure – watertight, dusttight
- KT7-25S/32S (Standard Interrupting Capacity) "Type E" Self-protected Combination Manual Controller ❺
- Terminal Adaptor for Type E Applications (Cat.# KT7-25[45]-TE)
- Gray and black Type 4/4X/12; IP66 handle (Cat.# KT7-HTN) ❹

Modifications (Factory Assembled)

Description	Add Suffix to Cat. Number	Price Adder
KT7 Auxiliaries & Trip Contacts, Front Mount 300V max.		
1 NO Auxiliary	**-A10**	**62**
1 NC Auxiliary	**-A01**	**62**
1 NO + 1 NC Auxiliary	**-A11**	**69**
2 NO Auxiliaries	**-A20**	**69**
1 NO SC+OL + 1 NC Auxiliary	**-T10A01**	**86**
1 NO SC+OL + 1 NO Auxiliary	**-T10A10**	**86**
Side Mount 600V max.		
2 NC Auxiliaries	**-AS02**	**79**
2 NO Auxiliaries	**-AS20**	**79**
1 NO + 1 NC Auxiliary	**-AS11**	**79**
Additional KT7 Trip Contacts, Side Mount 600V max.		
1 NO SC+OL+1 NO SC	**-R00**	**94**
1 NO SC+OL+1 NC SC	**-R01**	**94**
1 NC SC+OL+1 NO SC	**-R10**	**94**
Accessories		
Undervoltage Release Module	**-UA-✱**	**126**
Shunt Release Module	**-AA-✱**	**126**

-UA..-AA Coil Codes (✱)

AC Coil Code	Voltage Range 50 Hz	Voltage Range 60 Hz
24V	21V	24V
28V	24V	28V
120V	**105V**	**120V**
127V	110V	127V
230V	220...230V	~
240V	~	240...260V
277V	240V	277V
460V	380...400V	400...460V
480V	415V	480V
600V	550V	600V

❶ **Horsepower ratings shown in the table above are for reference.** ***The final selection of the manual starter depends on the actual motor full load current and service factor.***

- For motor with service factor less than 1.15. Use motor nameplate full load current times 0.9 and choose the motor starter with the appropriate current range. Example: Motor FLC = 4.2A; S.F. = 1.0. 4.2A x 0.9 = 3.78A. Select catalog number KTA7-25S-4.0A.

❷ Magnetic trip is fixed at 13x the maximum value of the current adjustment range. Refer to page F5 for applied KAIC ratings.

❸ KTA7 may be applied to single phase loads if 3 poles of device are wired in series. See footnote 1 for device selection criteria.

❹ A red and yellow handle may be selected instead of the standard gray and black handle. Change "WG" suffix to "WJ". Ex: Change KTA7-25S-0.16-**WG** to KTA7-25S-0.16-**WJ**.

❺ Catalog numbers and/or specific voltages (i.e. @ 575V) shaded in gray are suitable for use as a manual motor starter only because they are not Type E rated. See page F5 for ratings.

KTA7 Explosion Proof Motor Controllers - Type 7 / 9

Explosion Proof - Type 7 / 9 Enclosure

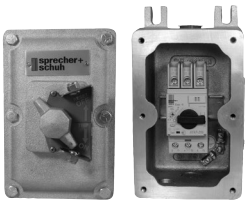

Amp / Horsepower Rating										
Max. Horsepower ❶❷❸						O/L Relay Ampere Range	Magnetic Response Current	Catalog Number	Price	Dimension Code
Single Phase		Three Phase								
115V	230V	200V	230V	460V	575V					
KTA7-25S Standard Interrupting Capacity										
~	~	~	~	~	~	0.10…0.16	2.1	**KTA7-25S-0.16A-EX**	**1069**	EX
~	~	~	~	~	~	0.16…0.25	3.3	**KTA7-25S-0.25A-EX**	**1069**	EX
~	~	~	~	~	~	0.25…0.40	5.2	**KTA7-25S-0.4A-EX**	**1069**	EX
~	~	~	~	~	~	0.40…0.63	8.2	**KTA7-25S-0.63A-EX**	**1113**	EX
~	~	~	~	~	1/2	0.63…1.0	13	**KTA7-25S-1.0A-EX**	**1113**	EX
~	1/10	~	~	1/2	3/4	1.0…1.6	21	**KTA7-25S-1.6A-EX**	**1113**	EX
1/10	1/6	1/2	1/2	1	1-1/2	1.6…2.5	33	**KTA7-25S-2.5A-EX**	**1113**	EX
1/8	1/3	3/4	3/4	2	3	2.5…4	52	**KTA7-25S-4.0A-EX**	**1113**	EX
1/4	1/2	1	1-1/2	3	5 ❹	4…6.3	82	**KTA7-25S-6.3A-EX**	**1113**	EX
1/2	1-1/2	2	3	5	7-1/2❹	6.3…10	130	**KTA7-25S-10A-EX**	**1113**	EX
1	2	3	~	10	10 ❹	10…16	208	**KTA7-25S-16A-EX**	**1159**	EX
1-1/2	3	5	5	~	15 ❹	14.5…20	260	**KTA7-25S-20A-EX**	**1159**	EX
2	3	7-1/2 ❹	7-1/2❹	15 ❹	20 ❹	18…25	325	**KTA7-25S-25A-EX**	**1159**	EX
2	5	7-1/2 ❹	10 ❹	20 ❹	25 ❹	24…29	406	**KTA7-32S-29A-EX**	**1269**	EX
2	5	7-1/2 ❹	10 ❹	25 ❹	30 ❹	27…32	448	**KTA7-32S-32A-EX**	**1269**	EX

Includes:

- Class I, Div 1, 2, Group C, D
  Class II, Div 1, 2, Group E, F & G enclosure
  Class III, Div 1, 2
  NEMA 7 & 9
- KT7-25S/32S (Standard interrupting capacity) "Type E" Self-protected Combination Manual Motor Controller ❹
- Terminal Adaptor for Type E Applications (Cat.# KT7-25-TE)

Modifications (Factory Assembled) ❺

KT7 Auxiliaries & Trip Contacts	Add Suffix to Cat. Number	Price Adder
Front Mount 300V max.		
1 NO Auxiliary	**-A10**	**62**
1 NC Auxiliary	**-A01**	**62**
1 NO + 1 NC Auxiliary	**-A11**	**69**
2 NO Auxiliaries	**-A20**	**69**
1 NO SC+OL + 1 NC Auxiliary	**-T10A01**	**86**
1 NO SC+OL + 1 NO Auxiliary	**-T10A10**	**86**
Side Mount 600V max.		
1 NO + 1 NC Auxiliary	**-AS11**	**79**
2 NO Auxiliaries	**-AS20**	**79**
1 NC SC+OL + 1 NO Auxiliary	**-R10**	**94**
1 NC SC+OL + 1 NC Auxiliary	**-R11**	**94**
Enclosure Modifications		
Breather/Drain	**-BD**	**110**

❶ **Horsepower ratings shown in the table above are for reference.** ***The final selection of the manual starter depends on the actual motor full load current and service factor.***

- For motor with service factor less than 1.15. Use motor nameplate full load current times 0.9 and choose the motor starter with the appropriate current range. Example: Motor FLC = 4.2A; S.F. = 1.0. 4.2A x 0.9 = 3.78A. Select catalog number KTA7-25S-4.0A.

❷ Magnetic trip is fixed at 13x the maximum value of the current adjustment range.

❸ KTA7 may be applied to single phase loads if 3 poles of device are wired in series. See footnote 1 for device selection criteria.

❹ Catalog numbers and/or specific voltages (i.e. @ 575V) shaded in gray are suitable for use as a manual motor starter only because they are not Type E rated. See page F5 for ratings.

❺ -UA✱ and -AA✱ options not possible in the -EX Enclosure.

KTA7 Explosion Proof Motor Controllers – Type 7 / 9 with Type 4 Gaskets

Explosion Proof - Type 7 / 9 / 4 Enclosure (with Type 4 Gaskets)

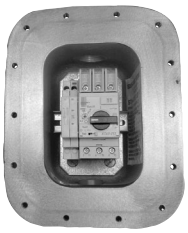

Amp / Horsepower Rating										
Max. Horsepower ❶❷❸						O/L Relay Ampere Range	Magnetic Response Current	Catalog Number	Price	Dimension Code
Single Phase		Three Phase								
115V	230V	200V	230V	460V	575V					
KTA7-25S Standard Interrupting Capacity										
~	~	~	~	~	~	0.10…0.16	2.1	**KTA7-25S-0.16A-EY**	**1233**	EY
~	~	~	~	~	~	0.16…0.25	3.3	**KTA7-25S-0.25A-EY**	**1233**	EY
~	~	~	~	~	~	0.25…0.40	5.2	**KTA7-25S-0.4A-EY**	**1233**	EY
~	~	~	~	~	~	0.40…0.63	8.2	**KTA7-25S-0.63A-EY**	**1269**	EY
~	~	~	~	~	1/2	0.63…1.0	13	**KTA7-25S-1.0A-EY**	**1269**	EY
~	1/10	~	~	1/2	3/4	1.0…1.6	21	**KTA7-25S-1.6A-EY**	**1269**	EY
1/10	1/6	1/2	1/2	1	1-1/2	1.6…2.5	33	**KTA7-25S-2.5A-EY**	**1269**	EY
1/8	1/3	3/4	3/4	2	3	2.5…4	52	**KTA7-25S-4.0A-EY**	**1269**	EY
1/4	1/2	1	1-1/2	3	5 ❹	4…6.3	82	**KTA7-25S-6.3A-EY**	**1269**	EY
1/2	1-1/2	2	3	5	7-1/2 ❹	6.3…10	130	**KTA7-25S-10A-EY**	**1269**	EY
1	2	3	~	10	10 ❹	10…16	208	**KTA7-25S-16A-EY**	**1306**	EY
1-1/2	3	5	5	~	15 ❹	14.5…20	260	**KTA7-25S-20A-EY**	**1306**	EY
2	3	7-1/2 ❹	7-1/2 ❹	15 ❹	20 ❹	18…25	325	**KTA7-25S-25A-EY**	**1406**	EY
2	5	7-1/2 ❹	10 ❹	20 ❹	25 ❹	24…29	406	**KTA7-32S-29A-EY**	**1416**	EY
2	5	7-1/2 ❹	10 ❹	25 ❹	30 ❹	27…32	448	**KTA7-32S-32A-EY**	**1416**	EY
KTA7-25H High Interrupting Capacity										
1/10	1/6	1/2	1/2	1	1-1/2	1.6…2.5	33	**KTA7-25H-2.5A-EY**	**1334**	EY
1/8	1/3	3/4	3/4	2	3	2.5…4	52	**KTA7-25H-4.0A-EY**	**1334**	EY
1/4	1/2	1	1-1/2	3	5	4…6.3	82	**KTA7-25H-6.3A-EY**	**1334**	EY
1/2	1-1/2	2	3	5	7-1/2	6.3…10	130	**KTA7-25H-10A-EY**	**1380**	EY
1	2	3	~	10	10	10…16	208	**KTA7-25H-16A-EY**	**1380**	EY
1-1/2	3	5	5	~	15 ❹	14.5…20	260	**KTA7-25H-20A-EY**	**1380**	EY
2	3	7-1/2	7-1/2	15	20 ❹	18…25	325	**KTA7-25H-25A-EY**	**1380**	EY
2	5	7-1/2 ❹	10 ❹	20 ❹	25 ❹	24…29	406	**KTA7-32H-29A-EY**	**1522**	EY
2	5	7-1/2 ❹	10 ❹	25 ❹	30 ❹	27…32	448	**KTA7-32H-32A-EY**	**1522**	EY
KTA7-45H High Interrupting Capacity										
1/2	1-1/2	2	3	5	7-1/2	6.3…10	130	**KTA7-45H-10A-EZ**	**2244**	EZ
1	2	3	~	10	10	10…16	208	**KTA7-45H-16A-EZ**	**2244**	EZ
1-1/2	3	5	5	~	15	14.5…20	260	**KTA7-45H-20A-EZ**	**2244**	EZ
2	3	~	7-1/2	20	20	18…25	325	**KTA7-45H-25A-EZ**	**2244**	EZ
2	5	7-1/2	10	20	30	23…32	416	**KTA7-45H-32A-EZ**	**2317**	EZ
3	7-1/2	10	15	30	40 ❹	32…45	585	**KTA7-45H-45A-EZ**	**2317**	EZ

❶ **Horsepower ratings shown in the table above are for reference.** ***The final selection of the manual starter depends on the actual motor full load current and service factor.***

- For motor with service factor less than 1.15. Use motor nameplate full load current times 0.9 and choose the motor starter with the appropriate current range. Example: Motor FLC = 4.2A; S.F. = 1.0. 4.2A x 0.9 = 3.78A. Select catalog number KTA7-25S-4.0A.

❷ Magnetic trip is fixed at 13x the maximum value of the current adjustment range.

❸ KTA7 may be applied to single phase loads if 3 poles of device are wired in series. See footnote ❶ for device selection criteria.

❹ Catalog numbers and/or specific voltages (i.e. @ 575V) shaded in gray are suitable for use as a manual motor starter only because they are not Type E rated. See page F5 for ratings.

Includes:

- Class I, Div 1, 2, Group C, D
  Class II, Div 1, 2, Group E, F & G enclosure
  Class III, Zone I, IIB & H2
- KT7 "Type E" Self-protected Combination Manual Motor Controller ❹
- Terminal Adaptor for Type E Applications (Cat.# KT7-25[45]-TE)

Modifications (Factory Assembled)

Description	Add Suffix to Cat. Number	Price Adder
KT7 Auxiliaries & Trip Contacts, Front Mount 300V max.		
1 NO Auxiliary	**-A10**	**62**
1 NC Auxiliary	**-A01**	**62**
1 NO + 1 NC Auxiliary	**-A11**	**69**
2 NO Auxiliaries	**-A20**	**69**
1 NO SC+OL + 1 NC Auxiliary	**-T10A01**	**86**
1 NO SC+OL + 1 NO Auxiliary	**-T10A10**	**86**
Side Mount 600V max.		
2 NC Auxiliaries	**-AS02**	**79**
2 NO Auxiliaries	**-AS20**	**79**
1 NO + 1 NC Auxiliary	**-AS11**	**79**
Additional KT7 Trip Contacts, Side Mount 600V max.		
1 NO SC+OL+1 NO SC	**-R00**	**94**
1 NO SC+OL+1 NC SC	**-R01**	**94**
1 NC SC+OL+1 NO SC	**-R10**	**94**
Accessories		
Undervoltage Release Module	**-UA-✱**	**126**
Shunt Release Module	**-AA-✱**	**126**
Enclosure Modifications		
Breather/Drain	**-BD**	**110**

-UA..-AA Coil Codes (✱)

AC Coil Code	Voltage Range	
	50 Hz	60 Hz
24V	**21V**	**24V**
28V	24V	28V
120V	**105V**	**120V**
127V	110V	127V
230V	220...230V	~
240V	~	240...260V
277V	240V	277V
460V	380...400V	400...460V
480V	415V	480V

Enclosed KTU7 Circuit Breaker - Type 4 / 4X / 12

Non-metallic, Type 4 / 4X / 12 Enclosure

Amp / Interrupt Rating							
❶ Fixed Thermal Current Rating [A]	Magnetic Trip [A]	Interrupting Rating (60Hz) [KA] 240V	480Y /277V	600Y /347V	Catalog Number	Price	Dimension Code
KTU7-D — High Interrupting Capacity – 2-Pole							
0.5	15…20xIn	100	100	50	KTU7-D-2D-0.5-VG	775	Q6 ❶
1.0	15…20xIn	100	100	50	KTU7-D-2D-1-VG		
2.0	15…20xIn	100	100	50	KTU7-D-2D-2-VG		
3.0	15…20xIn	100	100	50	KTU7-D-2D-3-VG		
4.0	15…20xIn	100	100	50	KTU7-D-2D-4-VG		
5.0	15…20xIn	100	100	50	KTU7-D-2D-5-VG		
6.0	15…20xIn	100	100	50	KTU7-D-2D-6-VG		
8.0	15…20xIn	100	100	50	KTU7-D-2D-8-VG		
10.0	15…20xIn	100	100	50	KTU7-D-2D-10-VG		
12.0	15…20xIn	65	65	25	KTU7-D-2D-12-VG		
15.0	15…20xIn	65	65	25	KTU7-D-2D-15-VG		
20.0	15…20xIn	65	65	25	KTU7-D-2D-20-VG		
25.0	15…20xIn	65	65	25	KTU7-D-2D-25-VG		
30.0	15…20xIn	65	65	25	KTU7-D-2D-30-VG		
KTU7-D — High Interrupting Capacity – 3-Pole							
0.5	15…20xIn	100	100	50	KTU7-D-3D-0.5-VG	875	Q6 ❶
1.0	15…20xIn	100	100	50	KTU7-D-3D-1-VG		
2.0	15…20xIn	100	100	50	KTU7-D-3D-2-VG		
3.0	15…20xIn	100	100	50	KTU7-D-3D-3-VG		
4.0	15…20xIn	100	100	50	KTU7-D-3D-4-VG		
5.0	15…20xIn	100	100	50	KTU7-D-3D-5-VG		
6.0	15…20xIn	100	100	50	KTU7-D-3D-6-VG		
8.0	15…20xIn	100	100	50	KTU7-D-3D-8-VG		
10.0	15…20xIn	100	100	50	KTU7-D-3D-10-VG		
12.0	15…20xIn	65	65	25	KTU7-D-3D-12-VG		
15.0	15…20xIn	65	65	25	KTU7-D-3D-15-VG		
20.0	15…20xIn	65	65	25	KTU7-D-3D-20-VG		
25.0	15…20xIn	65	65	25	KTU7-D-3D-25-VG		
30.0	15…20xIn	65	65	25	KTU7-D-3D-30-VG		

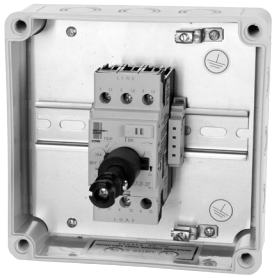

Includes:

- Type 4 / 4X / 12 enclosure – watertight, dusttight, corrosion resistant
- KTU7 UL489 Molded Case Circuit Breaker
- Black Type 4/4X/12; IP66 handle (Cat.# KT7-HTN Series E) ❷

Modifications (Factory Assembled) ❸

KT7 Auxiliaries & Trip Contacts - Front Mount 300V max.	Add Suffix to Cat. Number	Price Adder
1 NO Auxiliary	-A10	62
1 NC Auxiliary	-A01	62
1 NO + 1 NC Auxiliary	-A11	69
2 NO Auxiliaries	-A20	69
1 NO SC+OL + 1 NC Auxiliary	-T10A01	86
1 NO SC+OL + 1 NO Auxiliary	-T10A10	86

❶ KTU7 is 80% rated in this enclosure.
❷ A red and yellow handle may be selected instead of the standard black handle. Change "VG" suffix to "VJ". Ex: Change KTU7-D-2D-0.16-**VG** to KTU7-D-2D-0.16-**VJ**.
❸ Load Terminal Cover KT7-PEFC is included with any factory modifications.

Enclosed KTU7 Circuit Breaker - Type 12

Painted Steel, Type 12 Enclosure

Amp / Interrupt Rating							
❶ Fixed Thermal Current Rating [A]	Magnetic Trip [A]	Interrupting Rating (60Hz) [KA] 240V	480Y /277V	600Y /347V	Catalog Number	Price	Dimension Code
KTU7-D — High Interrupting Capacity – 2-Pole							
0.5	15…20xIn	100	100	50	**KTU7-D-2D-0.5-DG**	810	L ❶
1.0	15…20xIn	100	100	50	**KTU7-D-2D-1-DG**		
2.0	15…20xIn	100	100	50	**KTU7-D-2D-2-DG**		
3.0	15…20xIn	100	100	50	**KTU7-D-2D-3-DG**		
4.0	15…20xIn	100	100	50	**KTU7-D-2D-4-DG**		
5.0	15…20xIn	100	100	50	**KTU7-D-2D-5-DG**		
6.0	15…20xIn	100	100	50	**KTU7-D-2D-6-DG**		
8.0	15…20xIn	100	100	50	**KTU7-D-2D-8-DG**		
10.0	15…20xIn	100	100	50	**KTU7-D-2D-10-DG**		
12.0	15…20xIn	65	65	25	**KTU7-D-2D-12-DG**		
15.0	15…20xIn	65	65	25	**KTU7-D-2D-15-DG**		
20.0	15…20xIn	65	65	25	**KTU7-D-2D-20-DG**		
25.0	15…20xIn	65	65	25	**KTU7-D-2D-25-DG**		
30.0	15…20xIn	65	65	25	**KTU7-D-2D-30-DG**		
KTU7-D — High Interrupting Capacity – 3-Pole							
0.5	15…20xIn	100	100	50	**KTU7-D-3D-0.5-DG**	910	L ❶
1.0	15…20xIn	100	100	50	**KTU7-D-3D-1-DG**		
2.0	15…20xIn	100	100	50	**KTU7-D-3D-2-DG**		
3.0	15…20xIn	100	100	50	**KTU7-D-3D-3-DG**		
4.0	15…20xIn	100	100	50	**KTU7-D-3D-4-DG**		
5.0	15…20xIn	100	100	50	**KTU7-D-3D-5-DG**		
6.0	15…20xIn	100	100	50	**KTU7-D-3D-6-DG**		
8.0	15…20xIn	100	100	50	**KTU7-D-3D-8-DG**		
10.0	15…20xIn	100	100	50	**KTU7-D-3D-10-DG**		
12.0	15…20xIn	65	65	25	**KTU7-D-3D-12-DG**		
15.0	15…20xIn	65	65	25	**KTU7-D-3D-15-DG**		
20.0	15…20xIn	65	65	25	**KTU7-D-3D-20-DG**		
25.0	15…20xIn	65	65	25	**KTU7-D-3D-25-DG**		
30.0	15…20xIn	65	65	25	**KTU7-D-3D-30-DG**		

Includes:

- Type 12 enclosure – dusttight
- KTU7 UL489 Molded Case Circuit Breaker
- Black Type 4/4X/12; IP66 handle (Cat.# KT7-HTN Series E) ❷

Modifications (Factory Assembled) ❸

KT7 Auxiliaries & Trip Contacts - Front Mount 300V max.	Add Suffix to Cat. Number	Price Adder
1 NO Auxiliary	**-A10**	**62**
1 NC Auxiliary	**-A01**	**62**
1 NO + 1 NC Auxiliary	**-A11**	**69**
2 NO Auxiliaries	**-A20**	**69**
1 NO SC+OL + 1 NC Auxiliary	**-T10A01**	**86**
1 NO SC+OL + 1 NO Auxiliary	**-T10A10**	**86**

❶ KTU7 is 80% rated in this enclosure.
❷ A red and yellow handle may be selected instead of the standard black handle. Change "DG" suffix to "DJ". Ex: Change KTU7-D-2D-0.16-**DG** to KTU7-D-2D-0.16-**DJ**.
❸ Load Terminal Cover KT7-PEFC is included with any factory modifications.

Enclosed KTU7 Circuit Breaker - Type 4 / 12

Painted Steel, Type 4 / 12 Enclosure

Amp / Interrupt Rating							
❶ Fixed Thermal Current Rating [A]	Magnetic Trip [A]	Interrupting Rating (60Hz) [KA] 240V	480Y /277V	600Y /347V	Catalog Number	Price	Dimension Code
KTU7-D — High Interrupting Capacity – 2-Pole							
0.5	15…20xIn	100	100	50	KTU7-D-2D-0.5-WG	875	W6 ❶
1.0	15…20xIn	100	100	50	KTU7-D-2D-1-WG		
2.0	15…20xIn	100	100	50	KTU7-D-2D-2-WG		
3.0	15…20xIn	100	100	50	KTU7-D-2D-3-WG		
4.0	15…20xIn	100	100	50	KTU7-D-2D-4-WG		
5.0	15…20xIn	100	100	50	KTU7-D-2D-5-WG		
6.0	15…20xIn	100	100	50	KTU7-D-2D-6-WG		
8.0	15…20xIn	100	100	50	KTU7-D-2D-8-WG		
10.0	15…20xIn	100	100	50	KTU7-D-2D-10-WG		
12.0	15…20xIn	65	65	25	KTU7-D-2D-12-WG		
15.0	15…20xIn	65	65	25	KTU7-D-2D-15-WG		
20.0	15…20xIn	65	65	25	KTU7-D-2D-20-WG		
25.0	15…20xIn	65	65	25	KTU7-D-2D-25-WG		
30.0	15…20xIn	65	65	25	KTU7-D-2D-30-WG		
KTU7-D — High Interrupting Capacity – 3-Pole							
0.5	15…20xIn	100	100	50	KTU7-D-3D-0.5-WG	975	W6 ❶
1.0	15…20xIn	100	100	50	KTU7-D-3D-1-WG		
2.0	15…20xIn	100	100	50	KTU7-D-3D-2-WG		
3.0	15…20xIn	100	100	50	KTU7-D-3D-3-WG		
4.0	15…20xIn	100	100	50	KTU7-D-3D-4-WG		
5.0	15…20xIn	100	100	50	KTU7-D-3D-5-WG		
6.0	15…20xIn	100	100	50	KTU7-D-3D-6-WG		
8.0	15…20xIn	100	100	50	KTU7-D-3D-8-WG		
10.0	15…20xIn	100	100	50	KTU7-D-3D-10-WG		
12.0	15…20xIn	65	65	25	KTU7-D-3D-12-WG		
15.0	15…20xIn	65	65	25	KTU7-D-3D-15-WG		
20.0	15…20xIn	65	65	25	KTU7-D-3D-20-WG		
25.0	15…20xIn	65	65	25	KTU7-D-3D-25-WG		
30.0	15…20xIn	65	65	25	KTU7-D-3D-30-WG		

Includes:

- Type 4/12 enclosure – watertight, dusttight
- KTU7 UL489 Molded Case Circuit Breaker
- Black Type 4/4X/12; IP66 handle (Cat.# KT7-HTN Series E) ❷

Modifications (Factory Assembled) ❸

KT7 Auxiliaries & Trip Contacts - Front Mount 300V max.	Add Suffix to Cat. Number	Price Adder
1 NO Auxiliary	-A10	62
1 NC Auxiliary	-A01	62
1 NO + 1 NC Auxiliary	-A11	69
2 NO Auxiliaries	-A20	69
1 NO SC+OL + 1 NC Auxiliary	-T10A01	86
1 NO SC+OL + 1 NO Auxiliary	-T10A10	86

❶ KTU7 up to 15 Amp is 100% rated in this enclosure. KTU7 20…30 Amp is 80% rated.
❷ A red and yellow handle may be selected instead of the standard black handle. Change "WG" suffix to "WJ". Ex: Change KTU7-D-2D-0.16-**WG** to KTU7-D-2D-0.16-**WJ**.
❸ Load Terminal Cover KT7-PEFC is included with any factory modifications.

Enclosed Non-Reversing Combination Controller, AC Operation - Type 1/12K/IP66 ❻❼

Non-Metallic Type 1/12K/IP66 Enclosure (KS7-C0C4R)

Amp / Horsepower Rating									
Max. Horsepower ❶❷❸ Three Phase				O/L Relay Ampere Range	Magnetic Response Current	Index ❺	Catalog Number ❹❻❽❾	Price	Dimension Code
200V	230V	460V	575V						
KTA7-25S Standard Interrupting Capacity									
~	~	~	~	0.10…0.16	2.1	1	**CX7-9-10-✱-AS0.16A-A10-PG▼**	**551**	Q4
~	~	~	~	0.16…0.25	3.3	2	**CX7-9-10-✱-AS0.25A-A10-PG▼**	**551**	Q4
~	~	~	~	0.25…0.40	5.2	3	**CX7-9-10-✱-AS0.4A-A10-PG▼**	**551**	Q4
~	~	~	~	0.40…0.63	8.2	4	**CX7-9-10-✱-AS0.63A-A10-PG▼**	**578**	Q4
~	~	~	1/2	0.63…1.0	13	5	**CX7-9-10-✱-AS1.0A-A10-PG▼**	**578**	Q4
~	~	1/2	3/4	1.0…1.6	21	6	**CX7-9-10-✱-AS1.6A-A10-PG▼**	**578**	Q4
1/2	1/2	1	1-1/2	1.6…2.5	33	7	**CX7-9-10-✱-AS2.5A-A10-PG▼**	**578**	Q4
3/4	3/4	2	3	2.5…4	52	8	**CX7-9-10-✱-AS4.0A-A10-PG▼**	**578**	Q4
1	1-1/2	3	~	4…6.3	82	9	**CX7-9-10-✱-AS6.3A-A10-PG▼**	**578**	Q4
2	3	5	~	6.3…10	130	11	**CX7-12-10-✱-AS10A-A10-PG▼**	**620**	Q4
3	~	10	~	10…16	208	12	**CX7-16-10-✱-AS16A-A10-PG▼**	**632**	Q4
5	5	~	~	14.5…20	260	15	**CX7-23-10-✱-AS20A-A10-PG▼**	**695**	Q4
KTA7-25H High Interrupting Capacity									
1/2	1/2	1	1-1/2	1.6…2.5	33	17	**CX7-9-10-✱-AH2.5A-A10-PG▼**	**639**	Q4
3/4	3/4	2	3	2.5…4	52	19	**CX7-9-10-✱-AH4.0A-A10-PG▼**	**639**	Q4
1	1-1/2	3	5	4…6.3	82	22	**CX7-9-10-✱-AH6.3A-A10-PG▼**	**639**	Q4
2	3	5	7-1/2	6.3…10	130	24	**CX7-12-10-✱-AH10A-A10-PG▼**	**697**	Q4
3	~	10	10	10…16	208	28	**CX7-16-10-✱-AH16A-A10-PG▼**	**729**	Q4
5	5	~	~	14.5…20	260	31	**CX7-23-10-✱-AH20A-A10-PG▼**	**755**	Q4
~	7-1/2	15	~	18…25	325	33	**CX7-23-10-✱-AH25A-A10-PG▼**	**755**	Q4

Includes:

- Type 1/12K Non-metallic enclosure (KS7-C0C4R)
- KTA7 "Type E/F" Self-protected Combination Motor Controller with 1 NO front mount Auxiliary Contact (Cat #: KT7-PE1-10)
- Terminal Adaptor for Type E Applications (Cat.# KT7-25-TE1)
- CA7 contactor (for remote operation), AC coil
- Gray and black Type 1/12K; IP66 handle (KT7-SHB + KT7-KN1) ❽
- Power wiring
- Factory installed Pilot device option ❻

Replace ▼ with option code.
See page F101 for factory installed modifications

Contactor AC Coil Codes (✱) ❹

AC Coil Code	Voltage Range	
	50 Hz	60 Hz
24Z	24V	24V
120	110V	120V
220W	200V-220V	208V-240V
240	220V	240V
480 ❾	440V	480V
600 ❾	550V	600V

KWIKstarter coils are wired standard from the factory to terminals "L1" and "L2" (for line voltage control). This means the coil voltage must match the line voltage. When a coil is specified for 120V or less, it will be wired for a separate control source (not wired to L1 and L2).

❶ **Horsepower ratings shown in the table above are for reference.** ***The final selection of the manual starter depends on the actual motor full load current and service factor.*** For motor with service factor less than 1.15. Use motor nameplate full load current times 0.9 and choose the motor starter with the appropriate current range. Example: Motor FLC = 4.2A; S.F. = 1.0. 4.2A x 0.9 = 3.78A. Select catalog number KTA7-25S-4.0A.

❷ Magnetic trip is fixed at 13x the maximum value of the current adjustment range.

❸ CX7 may be applied to single phase loads. Contact factory for these specifications.

❹ Other voltages available, see Section A in this catalog. *Non-standard coil voltages not listed here must be ordered and installed separately as renewal parts.*

❺ KAIC Assembly Rating Index. See pages F73-F75 for Application Rating Guide.

❻ One Pilot Device option must be selected. Plastic Bezel is standard. Pilot Device options include D7-BX_ Base Mounted contact blocks. Pilot Light option must match coil voltage 24V AC or DC, 120V AC or 240V AC only. See Section H for more information.

❼ CPT not possible with KS7-C0C4R. Refer to page F118 for wiring diagram and F119dimensional information.

❽ A red and yellow handle may be selected instead of the standard gray and black handle. Change "PG" suffix to "PJ". Ex: Change CX7-9-10-✱-AS0.16A-A10-**PG**▼ to CX7-9-10-✱-AS0.16A-A10-**PJ**▼.

❾ Catalog number (–A10) includes front-mounted auxiliary KT7-PE1-10 with 300 VAC maximum control circuit matching line voltage, or provided from separate source, used to de-energize contactor coil under fault condition (auxiliary not available for customer use). For control circuits greater than 300 VAC, which is common with line voltage, the auxiliary will not be wired into the control circuit since the contactor coil will be de-energized when KTA7 is tripped due to overload or short circuit; therefore, the KT7-PE1-10 auxiliary is available for customer use.

Enclosed Non-Reversing Combination Controller, Electronic DC Operation - Type 1/12K/IP66 ❹❻❼

Non-Metallic Type 1/12K/IP66 Enclosure (KS7-C0C4R)

Amp / Horsepower Rating									
Max. Horsepower ❶❷❸ Three Phase				O/L Relay Ampere Range	Magnetic Response Current	Index ❺	Catalog Number ❹❻❽	Price	Dimension Code
200V	230V	460V	575V						
KTA7-25S Standard Interrupting Capacity									
~	~	~	~	0.10…0.16	2.1	1	**CX7-9E-10-✱-AS0.16A-A10-PG▼**	**601**	Q4
~	~	~	~	0.16…0.25	3.3	2	**CX7-9E-10-✱-AS0.25A-A10-PG▼**	**601**	Q4
~	~	~	~	0.25…0.40	5.2	3	**CX7-9E-10-✱-AS0.4A-A10-PG▼**	**628**	Q4
~	~	~	~	0.40…0.63	8.2	4	**CX7-9E-10-✱-AS0.63A-A10-PG▼**	**628**	Q4
~	~	~	1/2	0.63…1.0	13	5	**CX7-9E-10-✱-AS1.0A-A10-PG▼**	**628**	Q4
~	~	1/2	3/4	1.0…1.6	21	6	**CX7-9E-10-✱-AS1.6A-A10-PG▼**	**628**	Q4
1/2	1/2	1	1-1/2	1.6…2.5	33	7	**CX7-9E-10-✱-AS2.5A-A10-PG▼**	**628**	Q4
3/4	3/4	2	3	2.5…4	52	8	**CX7-9E-10-✱-AS4.0A-A10-PG▼**	**628**	Q4
1	1-1/2	3	~	4…6.3	82	9	**CX7-9E-10-✱-AS6.3A-A10-PG▼**	**628**	Q4
2	3	5	~	6.3…10	130	11	**CX7-12E-10-✱-AS10A-A10-PG▼**	**670**	Q4
3	~	10	~	10…16	208	12	**CX7-16E-10-✱-AS16A-A10-PG▼**	**682**	Q4
5	5	~	~	14.5…20	260	15	**CX7-23E-10-✱-AS20A-A10-PG▼**	**745**	Q4
KTA7-25H High Interrupting Capacity									
1/2	1/2	1	1-1/2	1.6…2.5	33	17	**CX7-9E-10-✱-AH2.5A-A10-PG▼**	**689**	Q4
3/4	3/4	2	3	2.5…4	52	19	**CX7-9E-10-✱-AH4.0A-A10-PG▼**	**689**	Q4
1	1-1/2	3	5	4…6.3	82	22	**CX7-9E-10-✱-AH6.3A-A10-PG▼**	**689**	Q4
2	3	5	7-1/2	6.3…10	130	24	**CX7-12E-10-✱-AH10A-A10-PG▼**	**745**	Q4
3	~	10	10	10…16	208	28	**CX7-16E-10-✱-AH16A-A10-PG▼**	**779**	Q4
5	5	~	~	14.5…20	260	31	**CX7-23E-10-✱-AH20A-A10-PG▼**	**805**	Q4
~	7-1/2	15	~	18…25	325	33	**CX7-23E-10-✱-AH25A-A10-PG▼**	**805**	Q4

Includes:

- Type 1/12K Non-metallic enclosure (KS7-C0C4R)
- KTA7 "Type E/F" Self-protected Combination Motor Controller with 1 NO front mount Auxiliary Contact (Cat #: KT7-PE1-10)
- Terminal Adaptor for Type E Applications (Cat.# KT7-25-TE1)
- CA7 contactors (for remote operation), with Electronic DC Coil
- Gray and black Type 1/12K; IP66 handle (KT7-SHB) + KT7-KN1 ❽
- Power wiring
- Factory installed Pilot device option ❻

Replace ▼ with option code.
See page F101 for factory installed modifications

Contactor Electronic DC Coil Codes (✱) ❹

DC Coil Codes	Voltage
12E	12V
24E	**24V**
36E	36-48V
48E	48-72V
110E	110-125V
220E	220-250V

KWIKstarter coils are wired standard from the factory to terminals "L1" and "L2" (for line voltage control). This means the coil voltage must match the line voltage. When a coil is specified for 120V or less, it will be wired for a separate control source (not wired to L1 and L2).

❶ **Horsepower ratings shown in the table above are for reference.** ***The final selection of the manual starter depends on the actual motor full load current and service factor.*** For motor with service factor less than 1.15. Use motor nameplate full load current times 0.9 and choose the motor starter with the appropriate current range. Example: Motor FLC = 4.2A; S.F. = 1.0. 4.2A x 0.9 = 3.78A. Select catalog number KTA7-25S-4.0A.

❷ Magnetic trip is fixed at 13x the maximum value of the current adjustment range.

❸ CX7 may be applied to single phase loads. Contact factory for these specifications.

❹ CX7-9E…23E with electronic coils are not interchangeable with non-electronic DC or AC coils.

❺ KAIC Assembly Rating Index. See pages F73-F75 for Application Rating Guide.

❻ One Pilot Device option must be selected. Plastic Bezel is standard. Pilot Device options include D7-BX_ Base Mounted contact blocks. Pilot Light option must match coil voltage 24V AC or DC, 120V AC or 240V AC only. See Section H for more information.

❼ CPT not possible with KS7-C0C4R. Refer to page F118 for wiring diagram and F119dimensional information.

❽ A red and yellow handle may be selected instead of the standard gray and black handle. Change "PG" suffix to "PJ". Ex: Change CX7-9-10-✱-AS0.16A-A10-**PG**▼ to CX7-9-10-✱-AS0.16A-A10-**PJ**▼.

Enclosed Non-Reversing Combination Controller with E-Stop, AC Operation - Type 1/12K/IP66 ❶❼❽

Non-Metallic Type 1/12K/IP66 Enclosure (KS7-C0C4R)

Amp / Horsepower Rating									
Max. Horsepower ❷❸❹ Three Phase				O/L Relay Ampere Range	Magnetic Response Current	Index ❻	Catalog Number ❺❼❾❿	Price	Dimension Code
200V	230V	460V	575V						
KTA7-25S Standard Interrupting Capacity									
~	~	~	~	0.10…0.16	2.1	1	**CX7-9-10-✱-AS0.16A-A10-PG4U-9**	**645**	Q4
~	~	~	~	0.16…0.25	3.3	2	**CX7-9-10-✱-AS0.25A-A10-PG4U-9**	**645**	Q4
~	~	~	~	0.25…0.40	5.2	3	**CX7-9-10-✱-AS0.4A-A10-PG4U-9**	**645**	Q4
~	~	~	~	0.40…0.63	8.2	4	**CX7-9-10-✱-AS0.63A-A10-PG4U-9**	**645**	Q4
~	~	~	1/2	0.63…1.0	13	5	**CX7-9-10-✱-AS1.0A-A10-PG4U-9**	**645**	Q4
~	~	1/2	3/4	1.0…1.6	21	6	**CX7-9-10-✱-AS1.6A-A10-PG4U-9**	**645**	Q4
1/2	1/2	1	1-1/2	1.6…2.5	33	7	**CX7-9-10-✱-AS2.5A-A10-PG4U-9**	**645**	Q4
3/4	3/4	2	3	2.5…4	52	8	**CX7-9-10-✱-AS4.0A-A10-PG4U-9**	**645**	Q4
1	1-1/2	3	~	4…6.3	82	9	**CX7-9-10-✱-AS6.3A-A10-PG4U-9**	**645**	Q4
2	3	5	~	6.3…10	130	11	**CX7-12-10-✱-AS10A-A10-PG4U-9**	**714**	Q4
3	~	10	~	10…16	208	12	**CX7-16-10-✱-AS16A-A10-PG4U-9**	**726**	Q4
5	5	~	~	14.5…20	260	15	**CX7-23-10-✱-AS20A-A10-PG4U-9**	**789**	Q4
KTA7-25H High Interrupting Capacity									
1/2	1/2	1	1-1/2	1.6…2.5	33	17	**CX7-9-10-✱-AH2.5A-A10-PG4U-9**	**733**	Q4
3/4	3/4	2	3	2.5…4	52	19	**CX7-9-10-✱-AH4.0A-A10-PG4U-9**	**733**	Q4
1	1-1/2	3	5	4…6.3	82	22	**CX7-9-10-✱-AH6.3A-A10-PG4U-9**	**733**	Q4
2	3	5	7-1/2	6.3…10	130	24	**CX7-12-10-✱-AH10A-A10-PG4U-9**	**794**	Q4
3	~	10	10	10…16	208	28	**CX7-16-10-✱-AH16A-A10-PG4U-9**	**823**	Q4
5	5	~	~	14.5…20	260	31	**CX7-23-10-✱-AH20A-A10-PG4U-9**	**849**	Q4
~	7-1/2	15	~	18…25	325	33	**CX7-23-10-✱-AH25A-A10-PG4U-9**	**849**	Q4

Includes:

- Type 1/12K Non-metallic enclosure (KS7-C0C4R) ❶
- KTA7 "Type E/F" Self-protected Sombination Motor Controller with 1 NO front mount Auxiliary Contact (Cat #: KT7-PE1-10)
- Terminal Adaptor for Type E Applications (Cat.# KT7-25-TE1)
- CA7 contactor (for remote operation), AC coil
- Multifunction 2-position Push Button and Emergency Stop ❼
- Gray and black Type 1/12K; IP66 handle (KT7-SHB + KT7-KN1) ❾
- Power wiring

This is a factory assembly.

Optional factory modifications are not available on this device.

Contactor AC Coil Codes (✱) ❺

AC Coil Code	Voltage Range 50 Hz	Voltage Range 60 Hz
24Z	24V	24V
120	110V	120V
220W	200V-220V	208V-240V
240	220V	240V
480 ❿	440V	480V
600 ❿	550V	600V

KWIKstarter coils are wired standard from the factory to terminals "L1" and "L2" (for line voltage control). This means the coil voltage must match the line voltage. When a coil is specified for 120V or less, it will be wired for a separate control source (not wired to L1 and L2).

❶ This is a factory assembly. The KS7-C0C4R does not include knock-outs for field assembly of this starter.

❷ **Horsepower ratings shown in the table above are for reference.** ***The final selection of the manual starter depends on the actual motor full load current and service factor.*** For motor with service factor less than 1.15. Use motor nameplate full load current times 0.9 and choose the motor starter with the appropriate current range. Example: Motor FLC = 4.2A; S.F. = 1.0. 4.2A x 0.9 = 3.78A. Select catalog number KTA7-25S-4.0A.

❸ Magnetic trip is fixed at 13x the maximum value of the current adjustment range.

❹ CX7 may be applied to single phase loads. Contact factory for these specifications.

❺ Other voltages available, see Section A in this catalog. *Non-standard coil voltages not listed here must be ordered and installed separately as renewal parts.*

❻ KAIC Assembly Rating Index. See pages F73-F75 for Application Rating Guide.

❼ Uses D7P-U2EFFEPX11 Two-Position Multifunction push button with legend I/O and D7P-MT44PX01 Emergency Stop Push Button.

❽ CPT not possible with KS7-C0C4R. Refer page F119 for dimensional information.

❾ A red and yellow handle may be selected instead of the standard gray and black handle. Change "PG" suffix to "PJ". Ex: CX7-9-10-✱-AS0.16A-A10-**PG**4U-9 becomes CX7-9-10-✱-AS0.16A-A10-**PJ**4U-9.

❿ Catalog number (–A10) includes front-mounted auxiliary KT7-PE1-10 with 300 VAC maximum control circuit matching line voltage, or provided from separate source, used to de-energize contactor coil under fault condition (auxiliary not available for customer use). For control circuits greater than 300 VAC, which is common with line voltage, the auxiliary will not be wired into the control circuit since the contactor coil will be de-energized when KTA7 is tripped due to overload or short circuit; therefore, the KT7-PE1-10 auxiliary is available for customer use.

Enclosed Reversing Combination Controller, AC Operation - Type 1/12K/IP66 ❻❼

Non-Metallic Type 1/12K/IP66 Enclosure (KS7-C0C4R)

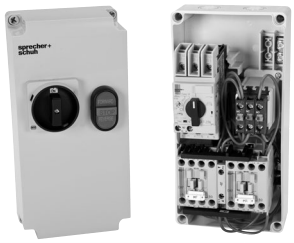

Amp / Horsepower Rating									
Max. Horsepower ❶❷❸ Three Phase				O/L Relay Ampere Range	Magnetic Response Current	Index ❺	Catalog Number ❹❻❽❾	Price	Dimension Code
200V	230V	460V	575V						
KTA7-25S Standard Interrupting Capacity									
~	~	~	~	0.10…0.16	2.1	1	**CXU7-9-22-✱-AS0.16A-A10-PG▼**	**854**	Q4
~	~	~	~	0.16…0.25	3.3	2	**CXU7-9-22-✱-AS0.25A-A10-PG▼**	**854**	Q4
~	~	~	~	0.25…0.40	5.2	3	**CXU7-9-22-✱-AS0.4A-A10-PG▼**	**854**	Q4
~	~	~	~	0.40…0.63	8.2	4	**CXU7-9-22-✱-AS0.63A-A10-PG▼**	**881**	Q4
~	~	~	1/2	0.63…1.0	13	5	**CXU7-9-22-✱-AS1.0A-A10-PG▼**	**881**	Q4
~	~	1/2	3/4	1.0…1.6	21	6	**CXU7-9-22-✱-AS1.6A-A10-PG▼**	**881**	Q4
1/2	1/2	1	1-1/2	1.6…2.5	33	7	**CXU7-9-22-✱-AS2.5A-A10-PG▼**	**881**	Q4
3/4	3/4	2	3	2.5…4	52	8	**CXU7-9-22-✱-AS4.0A-A10-PG▼**	**881**	Q4
1	1-1/2	3	~	4…6.3	82	9	**CXU7-9-22-✱-AS6.3A-A10-PG▼**	**881**	Q4
2	3	5	~	6.3…10	130	11	**CXU7-12-22-✱-AS10A-A10-PG▼**	**956**	Q4
3	~	10	~	10…16	208	12	**CXU7-16-22-✱-AS16A-A10-PG▼**	**994**	Q4
5	5	~	~	14.5…20	260	15	**CXU7-23-22-✱-AS20A-A10-PG▼**	**1020**	Q4
KTA7-25H High Interrupting Capacity									
1/2	1/2	1	1-1/2	1.6…2.5	33	17	**CXU7-9-22-✱-AH2.5A-A10-PG▼**	**942**	Q4
3/4	3/4	2	3	2.5…4	52	19	**CXU7-9-22-✱-AH4.0A-A10-PG▼**	**942**	Q4
1	1-1/2	3	5	4…6.3	82	22	**CXU7-9-22-✱-AH6.3A-A10-PG▼**	**942**	Q4
2	3	5	7-1/2	6.3…10	130	24	**CXU7-12-22-✱-AH10A-A10-PG▼**	**1033**	Q4
3	~	10	10	10…16	208	28	**CXU7-16-22-✱-AH16A-A10-PG▼**	**1065**	Q4
5	5	~	~	14.5…20	260	31	**CXU7-23-22-✱-AH20A-A10-PG▼**	**1091**	Q4
~	7-1/2	15	~	18…25	325	33	**CXU7-23-22-✱-AH25A-A10-PG▼**	**1091**	Q4

Includes:

- Type 1/12K Non-metallic enclosure (KS7-C0C4R)
- KTA7 "Type E/F" Self-protected Combination Motor Controller with 1 NO front mount Auxiliary Contact (Cat #: KT7-PE1-10)
- Terminal Adaptor for Type E Applications (Cat.# KT7-25-TE1)
- CA7 contactor (for remote operation), AC coil
- Gray and black Type 1/12K; IP66 handle (KT7-SHB + KT7-KN1) ❽
- Power wiring
- Factory installed Pilot device option ❻

Replace ▼ with option code.
See page F101 for factory installed modifications

Contactor AC Coil Codes (✱) ❹

AC Coil Code	Voltage Range 50 Hz	Voltage Range 60 Hz
24Z	24V	24V
120	110V	120V
220W	200V-220V	208V-240V
240	220V	240V
480 ❾	440V	480V
600 ❾	550V	600V

KWIKstarter coils are wired standard from the factory to terminals "L1" and "L2" (for line voltage control). This means the coil voltage must match the line voltage. When a coil is specified for 120V or less, it will be wired for a separate control source (not wired to L1 and L2).

❶ **Horsepower ratings shown in the table above are for reference.** ***The final selection of the manual starter depends on the actual motor full load current and service factor.*** For motor with service factor less than 1.15. Use motor nameplate full load current times 0.9 and choose the motor starter with the appropriate current range. Example: Motor FLC = 4.2A; S.F. = 1.0. 4.2A x 0.9 = 3.78A. Select catalog number KTA7-25S-4.0A.

❷ Magnetic trip is fixed at 13x the maximum value of the current adjustment range.

❸ CXU7 may be applied to single phase loads. Contact factory for specifications.

❹ Other voltages available, see Section A in this catalog. *Non-standard coil voltages not listed here must be ordered and installed separately as renewal parts.*

❺ KAIC Assembly Rating Index. See pages F73-F75 for Application Rating Guide.

❻ One Pilot Device option must be selected. Plastic Bezel is standard. Pilot Device options include D7-BX_ Base Mounted contact blocks. Pilot Light option must match coil voltage 24V AC or DC, 120V AC or 240V AC only. See Section H for more information.

❼ CPT not possible with KS7-C0C4R. Refer to page F118 for wiring diagram and F119 dimensional information.

❽ A red and yellow handle may be selected instead of the standard gray and black handle. Change "PG" suffix to "PJ". Ex: Change CXU7-9-10-✱-AS0.16A-A10-**PG▼** to CXU7-9-10-✱-AS0.16A-A10-**PJ▼**.

❾ Catalog number (–A10) includes front-mounted auxiliary KT7-PE1-10 with 300 VAC maximum control circuit matching line voltage, or provided from separate source, used to de-energize contactor coil under fault condition (auxiliary not available for customer use). For control circuits greater than 300 VAC, which is common with line voltage, the auxiliary will not be wired into the control circuit since the contactor coil will be de-energized when KTA7 is tripped due to overload or short circuit; therefore, the KT7-PE1-10 auxiliary is available for customer use.

Enclosed Reversing Combination Controller, Electronic DC Operation - Type 1/12K/IP66 ❹❻❼

Non-Metallic Type 1/12K/IP66 Enclosure (KS7-C0C4R)

Amp / Horsepower Rating									
Max. Horsepower ❶❷❸ Three Phase				O/L Relay Ampere Range	Magnetic Response Current	Index ❺	Catalog Number ❹❻❽	Price	Dimension Code
200V	230V	460V	575V						
KTA7-25S Standard Interrupting Capacity									
~	~	~	~	0.10…0.16	2.1	1	**CXU7-9E-22-✱-AS0.16A-A10-PG▼**	**954**	Q4
~	~	~	~	0.16…0.25	3.3	2	**CXU7-9E-22-✱-AS0.25A-A10-PG▼**	**954**	Q4
~	~	~	~	0.25…0.40	5.2	3	**CXU7-9E-22-✱-AS0.4A-A10-PG▼**	**981**	Q4
~	~	~	~	0.40…0.63	8.2	4	**CXU7-9E-22-✱-AS0.63A-A10-PG▼**	**981**	Q4
~	~	~	1/2	0.63…1.0	13	5	**CXU7-9E-22-✱-AS1.0A-A10-PG▼**	**981**	Q4
~	~	1/2	3/4	1.0…1.6	21	6	**CXU7-9E-22-✱-AS1.6A-A10-PG▼**	**981**	Q4
1/2	1/2	1	1-1/2	1.6…2.5	33	7	**CXU7-9E-22-✱-AS2.5A-A10-PG▼**	**981**	Q4
3/4	3/4	2	3	2.5…4	52	8	**CXU7-9E-22-✱-AS4.0A-A10-PG▼**	**981**	Q4
1	1-1/2	3	~	4…6.3	82	9	**CXU7-9E-22-✱-AS6.3A-A10-PG▼**	**981**	Q4
2	3	5	~	6.3…10	130	11	**CXU7-12E-22-✱-AS10A-A10-PG▼**	**1056**	Q4
3	~	10	~	10…16	208	12	**CXU7-16E-22-✱-AS16A-A10-PG▼**	**1094**	Q4
5	5	~	~	14.5…20	260	15	**CXU7-23E-22-✱-AS20A-A10-PG▼**	**1020**	Q4
KTA7-25H High Interrupting Capacity									
1/2	1/2	1	1-1/2	1.6…2.5	33	17	**CXU7-9E-22-✱-AH2.5A-A10-PG▼**	**1042**	Q4
3/4	3/4	2	3	2.5…4	52	19	**CXU7-9E-22-✱-AH4.0A-A10-PG▼**	**1042**	Q4
1	1-1/2	3	5	4…6.3	82	22	**CXU7-9E-22-✱-AH6.3A-A10-PG▼**	**1042**	Q4
2	3	5	7-1/2	6.3…10	130	24	**CXU7-12E-22-✱-AH10A-A10-PG▼**	**1133**	Q4
3	~	10	10	10…16	208	28	**CXU7-16E-22-✱-AH16A-A10-PG▼**	**1165**	Q4
5	5	~	~	14.5…20	260	31	**CXU7-23E-22-✱-AH20A-A10-PG▼**	**1191**	Q4
~	7-1/2	15	~	18…25	325	33	**CXU7-23E-22-✱-AH25A-A10-PG▼**	**1191**	Q4

Includes:

- Type 1/12K Non-metallic enclosure (KS7-C0C4R)
- KTA7 "Type E/F" Self-protected Combination Motor Controller with 1 NO front mount Auxiliary Contact (Cat #: KT7-PE1-10)
- Terminal Adaptor for Type E Applications (Cat.# KT7-25-TE1)
- CA7 contactors (for remote operation), with Electronic DC coil
- Gray and black Type 1/12K; IP66 handle (KT7-SHB + KT7-KN1) ❽
- Power wiring
- Factory installed Pilot device option ❻

Replace ▼ with option code.
See page F101 for factory installed modifications

Contactor Electronic DC Coil Codes (✱) ❹

DC Coil Codes	Voltage
12E	12V
24E	**24V**
36E	36-48V
48E	48-72V
110E	110-125V
220E	220-250V

KWIKstarter coils are wired standard from the factory to terminals "L1" and "L2" (for line voltage control). This means the coil voltage must match the line voltage. When a coil is specified for 120V or less, it will be wired for a separate control source (not wired to L1 and L2).

❶ **Horsepower ratings shown in the table above are for reference.** ***The final selection of the manual starter depends on the actual motor full load current and service factor.*** For motor with service factor less than 1.15. Use motor nameplate full load current times 0.9 and choose the motor starter with the appropriate current range. Example: Motor FLC = 4.2A; S.F. = 1.0. 4.2A x 0.9 = 3.78A. Select catalog number KTA7-25S-4.0A.

❷ Magnetic trip is fixed at 13x the maximum value of the current adjustment range.

❸ CXU7 may be applied to single phase loads. Contact factory for these specifications.

❹ CXU7-9E…23E with electronic coils are not interchangeable with non-electronic DC or AC coils.

❺ KAIC Assembly Rating Index. See pages F73-F75 for Application Rating Guide.

❻ One Pilot Device option must be selected. Blanks are not available. Plastic Bezel is standard. Pilot Device options include D7-BX_ Base Mounted contact blocks. Pilot Light option must match coil voltage 24V AC or DC, 120V AC or 240V AC only. See Section H for more information.

❼ CPT not possible with KS7-C0C4R. Refer to page F118 for wiring diagram and F119dimensional information.

❽ A red and yellow handle may be selected instead of the standard gray and black handle. Change "PG" suffix to "PJ". Ex: Change CXU7-9-10-✱-AS0.16A-A10-**PG**▼ to CXU7-9-10-✱-AS0.16A-A10-**PJ**▼.

CX7 Non-Reversing Controller Modifications

Pilot Device Options - required		
Select only one option only ❶❷❸	**Replace ▼ in catalog number with**	**Price Adder**
START-STOP Multi-function	**3U**	**Standard**
I-O Multi-function	**4U**	**Standard**
OFF-ON 2-Position Selector switch	**6**	**Standard**
HAND-OFF-AUTO 3-Position Selector switch	**7**	**Standard**
Run Pilot Light Green	**1G**	**Standard**
Run Pilot Light Red	**1R**	**Standard**
Overload Alarm Pilot Light	**1Y**	**Standard**
D7-N8 22mm Hole Plug	**0**	**Standard**
Additional KT7 Auxiliaries & Trip Contacts	**Change "-A10" to...**	**Price Adder**
Front Mount 300V maximum		
1 NO + 1 NC Auxiliary	**-A11**	**62**
2 NO Auxiliaries	**-A20**	**62**
1 NO SC+OL + 1 NC Auxiliary	**-T10A01**	**79**
1 NO SC+OL + 1 NO Auxiliary	**-T10A10**	**79**

CXU7 Reversing Controller Modifications

Pilot Device Options - required		
Select only one option only ❶❷❸	**Replace ▼ in catalog number with**	**Price Adder**
FOR-STOP-REV Multi-function	**3U**	**Standard**
UP-STOP-DOWN Multi-function	**4U**	**Standard**
OPEN-STOP-CLOSE Multi-function	**5U**	**Standard**
FOR-STOP-REV 3-Position Selector switch	**6**	**Standard**
UP-OFF-DOWN 3-Position Selector switch	**7**	**Standard**
OPEN-OFF-CLOSE 3-Position Selector switch	**8**	**Standard**
Overload Alarm Pilot Light	**1Y**	**Standard**
D7-N8 22mm Hole Plug	**0**	**Standard**
Additional KT7 Auxiliaries & Trip Contacts	**Change "-A10" to...**	**Price Adder**
Front Mount 300V maximum		
1 NO + 1 NC Auxiliary	**-A11**	**62**
2 NO Auxiliaries	**-A20**	**62**
1 NO SC+OL + 1 NC Auxiliary	**-T10A01**	**79**
1 NO SC+OL + 1 NO Auxiliary	**-T10A10**	**79**

CX7 Non-Reversing Controller Additions

Addition	Add to end of catalog number	Price Adder
CA7 Contactor Accessories		
Electronic Interface ❹	**-JE**	**+94**
Surge Suppressor RD	**-C**	**+54**
Surge Suppressor Varistor	**-V**	**+54**
CA7 Auxiliary Contacts ❺		
1 NO Auxiliary	**-S10**	**45**
1 NC Auxiliary	**-S01**	**45**
1 NO + 1 NC Auxiliary	**-S11**	**57**
2 NO Auxiliaries	**-S20**	**57**
2 NC Auxiliaries	**-S02**	**57**
Alternate Aux. Contact Arrangement (CA7 only)		
1 NC in lieu of standard 1 NO	**-SX10**	**17**
2 NC in lieu of standard 2 NO (on CXU7 only)	**-SX2**	**17**
Unwired Terminal Blocks Specify quantity (▼)	**-▼TB**	**22**

CXU7 Reversing Controller Additions

Addition	Add to end of catalog number	Price Adder
CA7 Contactor Accessories		
Electronic Interface ❹	**-JE**	**+188**
Surge Suppressor RC	**-C**	**+108**
Surge Suppressor Varistor	**-V**	**+108**

❶ KS7-C0C4R only has (1) 22mm hole to accomodate (1) pilot device.
❷ Currently supply D7 multi-function pushbuttons as standard which do not require protective boots to meet Type 4X.
See Section H in this catalog for description (all suffix's ending in "U").
❸ Pilot Lights may be applied with 24VAC/VDC, 120VAC or 240VAC Control Circuit.
❹ CRI7E-24 will be used. CRI7E-12 by special order only.
❺ See page A47 for limitations on adding auxiliaries to Electronic DC Coil contactors.

CX7 KWIKstarter Enclosures for use with KTA7 Type E Motor Controllers and CA7 Contactors ❶❸

Component	Description	For Use With		Environmental Approvals	Catalog Number	Price
		Type E Controller	Contactor			
	Enclosure for Combo KWIKstarter ❶ CX7/CXU7-9…23 CX7/CXU7-9E…23E	KTA7-25S KTA7-25H	CA7-9...23 CA7-9E…23E CAU7-9…23 CAU7-9E…23E	cUL Type 1/12K IEC IP66	**KS7-C0C4R**	**110**

Handle Accessory for CX7/CXU7 KWIKstarters ❶

Accessory	Description	For Use With	Color	Catalog Number	Price
	Door Coupling Handle ❶ • Padlockable • NEMA Type 1/12K and IP66 • Includes handle coupling (shaft) • Requires KT7-KN1 Locking Knob	All KT7s	Gray/Black	**KT7-SHB**	**20**
			Red/Yellow	**KT7-SHRY**	
	Lockable Twist Knob • for use with KT7-SHB	All KT7s	Gray/Black	**KT7-KN1**	**See page F16**
	Universal Connector for CX7/CXU7 • Provides electrical interconnection of KTA7 and CA7 (with AC or Electronic DC coil) • Applies to FVNR and FVR versions	All KT7s	Black	**KT7-25S-PEC23A ❹**	**38**

CX7 KWIKstarter Pilot Device Kits (for use with KS7-C0C4R Type 1/12K) ❶❷

Kits	Description	Contact Blocks included		Catalog Number	Price
		NO	NC		
	Multi-Function Pushbutton kit Non-illuminated **START-STOP** **I-O**	1	1	**KS7-P3U** **KS7-P4U**	**See page C25 for pricing**
	FOR-STOP-REV **UP-STOP-DOWN** **OPEN-STOP-CLOSE**	2	1	**KS7-P3U-REV** **KS7-P4U-REV** **KS7-P5U-REV**	
	Selector switch kits Non-illuminated, includes legend plate **ON-OFF** 2-Position	1	0	**KS7-P6**	
	HAND-OFF-AUTO 3-Position	2	0	**KS7-P7**	
	FOR-OFF-REV 3-Position **UP-OFF-DOWN** 3-Position **OPEN-OFF-CLOSE** 3-Position	2	0	**KS7-P6-REV** **KS7-P7-REV** **KS7-P8-REV**	
	Run Pilot Light or **Overload Alarm Pilot Light** Plastic operator with diffuser lens in Red, Green or Yellow, with integrated LED power module	Replace ✪ with color choice **R** = Red **G** = Green **Y** = Yellow		**KS7-P1✪24V ❺** **KS7-P1✪120V** **KS7-P1✪240V**	
	Hole Plug used to plug 22.5mm holes.	Gray Plastic		**D7-N8**	**See page H71**

❶ KS7-C0C4R is supplied with the following holes:
- (1) one 22mm hole for a Pilot Device option, select one kit from this page.
- (1) one 22mm hole for KT7-SHB (or SHRY) Disconnect or Reset handle.

❷ Plastic bezel is standard. Pilot Device Kits include D7-BX_ Base Mounted contact blocks. See Section H for more information.

❸ CPT not possible.

❹ Standard KT7-25S-PEC23 does not work in CX7/CXU7 Kwikstarters.

❺ KS7-P1✪24V can be used with 24VAC or 24VDC.

Enclosed Non-Reversing Combination Controller, AC Operation - Type 4 / 12

Amp / Horsepower Rating

Painted Steel, Type 4 / 12 Enclosure

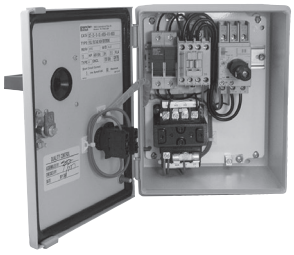

Max. Horsepower ❶❷❸ Three Phase 200V	230V	460V	575V	O/L Relay Ampere Range	Magnetic Response Current	Index ❻	Catalog Number ❹❼	Price	Dimension Code
KTA7-25S Standard Interrupting Capacity									
~	~	~	~	0.10…0.16	2.1	1	CX7-9-10-✱-AS0.16A-A10-WG	918	W6
~	~	~	~	0.16…0.25	3.3	2	CX7-9-10-✱-AS0.25A-A10-WG	918	W6
~	~	~	~	0.25…0.40	5.2	3	CX7-9-10-✱-AS0.4A-A10-WG	918	W6
~	~	~	~	0.40…0.63	8.2	4	CX7-9-10-✱-AS0.63A-A10-WG	953	W6
~	~	~	1/2	0.63…1.0	13	5	CX7-9-10-✱-AS1.0A-A10-WG	953	W6
~	~	1/2	3/4	1.0…1.6	21	6	CX7-9-10-✱-AS1.6A-A10-WG	953	W6
1/2	1/2	1	1-1/2	1.6…2.5	33	7	CX7-9-10-✱-AS2.5A-A10-WG	953	W6
3/4	3/4	2	3	2.5…4	52	8	CX7-9-10-✱-AS4.0A-A10-WG	953	W6
1	1-1/2	3	~	4…6.3	82	9	CX7-9-10-✱-AS6.3A-A10-WG	953	W6
2	3	5	~	6.3…10	130	11	CX7-12-10-✱-AS10A-A10-WG	988	W6
3	~	10	~	10…16	208	12	CX7-16-10-✱-AS16A-A10-WG	1044	W6
5	5	~	~	14.5…20	260	15	CX7-23-10-✱-AS20A-A10-WG	1065	W6
KTA7-25H High Interrupting Capacity									
1/2	1/2	1	1-1/2	1.6…2.5	33	17	CX7-9-10-✱-AH2.5A-A10-WG	1015	W6
3/4	3/4	2	3	2.5…4	52	19	CX7-9-10-✱-AH4.0A-A10-WG	1015	W6
1	1-1/2	3	5	4…6.3	82	22	CX7-9-10-✱-AH6.3A-A10-WG	1015	W6
2	3	5	7-1/2	6.3…10	130	24	CX7-12-10-✱-AH10A-A10-WG	1095	W6
3	~	10	10	10…16	208	28	CX7-16-10-✱-AH16A-A10-WG	1116	W6
5	5	~	~	14.5…20	260	31	CX7-23-10-✱-AH20A-A10-WG	1137	W6
7-1/2	7-1/2	15	~	18…25	325	33	CX7-23-10-✱-AH25A-A10-WG	1137	W6
KTA7-45H High Interrupting Capacity									
2	3	5	7-1/2	6.3…10	130	36	CX7-30-10-✱-AH10A-A10-WG	1392	W7
3	~	10	10	10…16	208	37	CX7-30-10-✱-AH16A-A10-WG	1392	W7
5	5	~	15	14.5…20	260	38	CX7-30-10-✱-AH20A-A10-WG	1392	W7
~	7-1/2	20	20	18…25	325	39	CX7-30-10-✱-AH25A-A10-WG	1392	W7
7-1/2	10	20	25	23...32	416	41	CX7-30-10-✱-AH32A-A10-WG	1482	W7
10	10	25	30	32…45	585	45	CX7-37-10-✱-AH45A-A10-WG	1498	W7
10	15	30	~	32…45	585	46	CX7-43-10-✱-AH45A-A10-WG	1521	W7

Includes:

- Type 4 / 12 enclosure - watertight, dustight
- KTA7 "Type E/F" Self-protected Combination Motor Controller with 1 NO front mount Auxiliary Contact (Cat #: KT7-PE1-10)
- Terminal Adaptor for Type E Applications (Cat.# KT7-25[45]-TE)
- CA7 contactor (for remote operation), AC coil
- Power wiring
- Gray and black Type 4/4X/12; IP66 handle (Cat.# KT7-HTN) ❹
- Pilot device shown is factory installed option

See page F107 for factory installed modifications

Contactor AC Coil Codes (✱)

AC Coil Code	Voltage Range 50 Hz	60 Hz
24Z	24V	24V
120	110V	120V
208	~	208V
220W	200V-220V	208V-240V
240	220V	240V
277	240V	277V
380 ❼	380V-400V	440V
480 ❼	440V	480V
600 ❼	550v	600V

This item is available in the ORANGE EXPRESS 3-day shipping program

❶ **Horsepower ratings shown in the table above are for reference.** ***The final selection of the manual starter depends on the actual motor full load current and service factor.***

- For motor with service factor less than 1.15. Use motor nameplate full load current times 0.9 and choose the motor starter with the appropriate current range. Example: Motor FLC = 4.2A; S.F. = 1.0. 4.2A x 0.9 = 3.78A. Select catalog number KTA7-25S-4.0A.

❷ Magnetic trip is fixed at 13x the maximum value of the current adjustment range.

❸ CX7 may be applied to single phase loads. See footnote 1 for device selection criteria. To order single phase unit, change "CX7" in catalog number to "CBX7". Three pole series connection will be provided. Ex: Change **CX7**-9-10-✱-0.16A-A10-WG to **CBX7**-9-10-✱-0.16A-A10-WJ.

❹ A red and yellow handle may be selected instead of the standard gray and black handle. Change "WG" suffix to "WJ". Ex: Change CX7-9-10-✱-0.16A-A10-**WG** to CX7-9-10-✱-0.16A-A10-**WJ**.

❺ Other voltages available, see Section A in this catalog. *Non-standard coil voltages not listed here must be ordered and installed separately as renewal parts.*

❻ KAIC Assembly Rating Index. See pages F73-F75 for Application Rating Guide.

❼ Catalog number (–A10) includes front-mounted auxiliary KT7-PE1-10 with 300 VAC maximum control circuit matching line voltage, or provided from separate source, used to de-energize contactor coil under fault condition (auxiliary not available for customer use). For control circuits greater than 300 VAC, which is common with line voltage, the auxiliary will not be wired into the control circuit since the contactor coil will be de-energized when KTA7 is tripped due to overload or short circuit; therefore, the KT7-PE1-10 auxiliary is available for customer use.

Enclosed Non-Reversing Combination Controller, Electronic DC Coil - Type 4 / 12

Amp / Horsepower Rating

Painted Steel, Type 4 / 12 Enclosure

Max. Horsepower ❶❷❸ Three Phase 200V	230V	460V	575V	O/L Relay Ampere Range	Magnetic Response Current	Index ❼	Catalog Number ❹	Price	Dimension Code
KTA7-25S Standard Interrupting Capacity									
~	~	~	~	0.10…0.16	2.1	1	**CX7-9E-10-✱-AS0.16A-A10-WG**	**1153**	W6
~	~	~	~	0.16…0.25	3.3	2	**CX7-9E-10-✱-AS0.25A-A10-WG**	**1153**	W6
~	~	~	~	0.25…0.40	5.2	3	**CX7-9E-10-✱-AS0.4A-A10-WG**	**1153**	W6
~	~	~	~	0.40…0.63	8.2	4	**CX7-9E-10-✱-AS0.63A-A10-WG**	**1186**	W6
~	~	~	1/2	0.63…1.0	13	5	**CX7-9E-10-✱-AS1.0A-A10-WG**	**1186**	W6
~	~	1/2	3/4	1.0…1.6	21	6	**CX7-9E-10-✱-AS1.6A-A10-WG**	**1186**	W6
1/2	1/2	1	1-1/2	1.6…2.5	33	7	**CX7-9E-10-✱-AS2.5A-A10-WG**	**1186**	W6
3/4	3/4	2	3	2.5…4	52	8	**CX7-9E-10-✱-AS4.0A-A10-WG**	**1186**	W6
1	1-1/2	3	~	4…6.3	82	9	**CX7-9E-10-✱-AS6.3A-A10-WG**	**1186**	W6
2	3	5	~	6.3…10	130	11	**CX7-12E-10-✱-AS10A-A10-WG**	**1255**	W6
3	~	10	~	10…16	208	12	**CX7-16E-10-✱-AS16A-A10-WG**	**1333**	W6
5	5	~	~	14.5…20	260	15	**CX7-23E-10-✱-AS20A-A10-WG**	**1377**	W6
KTA7-25H High Interrupting Capacity									
1/2	1/2	1	1-1/2	1.6…2.5	33	17	**CX7-9E-10-✱-AH2.5A-A10-WG**	**1249**	W6
3/4	3/4	2	3	2.5…4	52	19	**CX7-9E-10-✱-AH4.0A-A10-WG**	**1249**	W6
1	1-1/2	3	5	4…6.3	82	22	**CX7-9E-10-✱-AH6.3A-A10-WG**	**1249**	W6
2	3	5	7-1/2	6.3…10	130	24	**CX7-12E-10-✱-AH10A-A10-WG**	**1359**	W6
3	~	10	10	10…16	208	28	**CX7-16E-10-✱-AH16A-A10-WG**	**1405**	W6
5	5	~	~	14.5…20	260	31	**CX7-23E-10-✱-AH20A-A10-WG**	**1449**	W6
7-1/2	7-1/2	15	~	18…25	325	33	**CX7-23E-10-✱-AH25A-A10-WG**	**1449**	W6
KTA7-45H High Interrupting Capacity									
2	3	5	7-1/2	6.3…10	130	36	**CX7-30E-10-✱-AH10A-A10-WG**	**1749**	W7
3	~	10	10	10…16	208	37	**CX7-30E-10-✱-AH16A-A10-WG**	**1749**	W7
5	5	~	15	14.5…20	260	38	**CX7-30E-10-✱-AH20A-A10-WG**	**1749**	W7
~	7-1/2	20	20	18…25	325	39	**CX7-30E-10-✱-AH25A-A10-WG**	**1749**	W7
7-1/2	10	20	25	23…32	416	41	**CX7-37E-10-✱-AH32A-A10-WG**	**1851**	W7
10	10	25	30	32…45	585	45	**CX7-37E-10-✱-AH45A-A10-WG**	**1903**	W7
10	15	30	~	32…45	585	46	**CX7-43E-10-✱-AH45A-A10-WG**	**1972**	W7

Includes:

- Type 4 / 12 enclosure - watertight, dustight
- KT7 "Type E/F" Combination Motor Controller with 1 NO front mount Auxiliary Contact (Cat #: KT7-PE1-10)
- Terminal Adaptor for Type E Applications (Cat.# KT7-25[45]-TE)
- CA7 contactor (for remote operation), Electronic DC coil
- Power wiring
- Gray and black Type 4/4X/12; IP66 handle (Cat.# KT7-HTN) ❹
- Pilot device shown is factory installed option

See page F107 for factory installed modifications

Contactor Electronic DC Coil Codes (✱) ❺

DC Coil Codes	Voltage
12E	12V
24E	**24V**
36E	36-48V
48E	48-72V
110E	110-125V
220E	220-250V

❶ **Horsepower ratings shown in the table above are for reference.** ***The final selection of the manual starter depends on the actual motor full load current and service factor.***

- For motor with service factor less than 1.15. Use motor nameplate full load current times 0.9 and choose the motor starter with the appropriate current range. Example: Motor FLC = 4.2A; S.F. = 1.0. 4.2A x 0.9 = 3.78A. Select catalog number KTA7-25S-4.0A.

❷ Magnetic trip is fixed at 13x the maximum value of the current adjustment range.

❸ CX7 may be applied to single phase loads. Contact factory for these specifications.

❹ A red and yellow handle may be selected instead of the standard gray and black handle. Change "WG" suffix to "WJ". Ex: Change CX7-9E-10-✱-0.16A-A10-**WG** to CX7-9E-10-✱-0.16A-A10-**WJ**.

❺ CX7-9E…43E with electronic coils are not interchangeable with non-electronic DC or AC coils.

❼ KAIC Assembly Rating Index. See pages F73-F75 for Application Rating Guide.

Ordering Instructions

Specify Catalog Number	
Replace (✱) with Coil Code Select modifications if required	**See Coil Code tables on this page for codes**

Enclosed Reversing Combination Controller, AC Operation - Type 4 / 12

Amp / Horsepower Rating

Painted Steel, Type 4 / 12 Enclosure

Max. Horsepower ❶❷❸ Three Phase 200V	230V	460V	575V	O/L Relay Ampere Range	Magnetic Response Current	Index ❻	Catalog Number ❹❼	Price	Dimension Code
KTA7-25S Standard Interrupting Capacity									
~	~	~	~	0.10…0.16	2.1	1	**CXU7-9-22-✱-AS0.16A-A10-WG**	**1005**	W6
~	~	~	~	0.16…0.25	3.3	2	**CXU7-9-22-✱-AS0.25A-A10-WG**	**1005**	W6
~	~	~	~	0.25…0.40	5.2	3	**CXU7-9-22-✱-AS0.4A-A10-WG**	**1005**	W6
~	~	~	~	0.40…0.63	8.2	4	**CXU7-9-22-✱-AS0.63A-A10-WG**	**1039**	W6
~	~	~	1/2	0.63…1.0	13	5	**CXU7-9-22-✱-AS1A-A10-WG**	**1039**	W6
~	~	1/2	3/4	1.0…1.6	21	6	**CXU7-9-22-✱-AS1.6A-A10-WG**	**1039**	W6
1/2	1/2	1	1-1/2	1.6…2.5	33	7	**CXU7-9-22-✱-AS2.5A-A10-WG**	**1039**	W6
3/4	3/4	2	3	2.5…4	52	8	**CXU7-9-22-✱-AS4.0A-A10-WG**	**1039**	W6
1	1-1/2	3	~	4…6.3	82	9	**CXU7-9-22-✱-AS6.3A-A10-WG**	**1039**	W6
2	3	5	~	6.3…10	130	11	**CXU7-12-22-✱-AS10A-A10-WG**	**1082**	W6
3	~	10	~	10…16	208	12	**CXU7-16-22-✱-AS16A-A10-WG**	**1144**	W6
5	5	~	~	14.5…20	260	15	**CXU7-23-22-✱-AS20A-A10-WG**	**1169**	W6
KTA7-25H High Interrupting Capacity									
1/2	1/2	1	1-1/2	1.6…2.5	33	17	**CXU7-9-22-✱-AH2.5A-A10-WG**	**1100**	W6
3/4	3/4	2	3	2.5…4	52	19	**CXU7-9-22-✱-AH4.0A-A10-WG**	**1100**	W6
1	1-1/2	3	5	4…6.3	82	22	**CXU7-9-22-✱-AH6.3A-A10-WG**	**1100**	W6
2	3	5	7-1/2	6.3…10	130	24	**CXU7-12-22-✱-AH10A-A10-WG**	**1191**	W6
3	~	10	10	10…16	208	28	**CXU7-16-22-✱-AH16A-A10-WG**	**1215**	W6
5	5	~	~	14.5…20	260	31	**CXU7-23-22-✱-AH20A-A10-WG**	**1241**	W6
7-1/2	7-1/2	15	~	18…25	325	33	**CXU7-23-22-✱-AH25A-A10-WG**	**1241**	W6
KTA7-45H High Interrupting Capacity									
2	3	5	7-1/2	6.3…10	130	36	**CXU7-30-22-✱-AH10A-A10-WG**	**1456**	W7
3	~	10	10	10…16	208	37	**CXU7-30-22-✱-AH16A-A10-WG**	**1456**	W7
5	5	~	15	14.5…20	260	38	**CXU7-30-22-✱-AH20A-A10-WG**	**1456**	W7
~	7-1/2	20	20	18…25	325	39	**CXU7-30-22-✱-AH25A-A10-WG**	**1456**	W7
7-1/2	10	20	25	23…32	416	41	**CXU7-37-22-✱-AH32A-A10-WG**	**1399**	W7
10	10	25	30	32…45	585	45	**CXU7-37-22-✱-AH45A-A10-WG**	**1580**	W7
10	15	30	~	32…45	585	46	**CXU7-43-22-✱-AH45A-A10-WG**	**1640**	W7

Includes:

- Type 4 / 12 enclosure - watertight, dustight
- KT7 "Type E/F" Combination Motor Controller with 1 NO front mount Auxiliary Contact (Cat #: KT7-PE1-10)
- Terminal Adaptor for Type E Applications (Cat.# KT7-25[45]-TE)
- CA7 contactors (for remote operation), AC coil
- Power wiring
- Gray and black Type 4/4X/12; IP66 handle (Cat.# KT7-HTN) ❹
- Control power transformer, pilot device, terminals and other equipment shown are factory installed options

See page F107 for factory installed modifications

Contactor AC Coil Codes (✱)

AC Coil Code	Voltage Range 50 Hz	60 Hz
24Z	**24V**	**24V**
120	**110V**	**120V**
208	~	208V
220W	**200V-220V**	**208V-240V**
240	220V	240V
277	240V	277V
380 ❼	380V-400V	440V
480 ❼	**440V**	**480V**
600 ❼	550v	600V

❶ **Horsepower ratings shown in the table above are for reference.** ***The final selection of the manual starter depends on the actual motor full load current and service factor.***

- For motor with service factor less than 1.15. Use motor nameplate full load current times 0.9 and choose the motor starter with the appropriate current range. Example: Motor FLC = 4.2A; S.F. = 1.0. 4.2A x 0.9 = 3.78A. Select catalog number KTA7-25S-4.0A.

❷ Magnetic trip is fixed at 13x the maximum value of the current adjustment range.

❸ CXU7 may be applied to single phase loads. Contact factory for these applications.

❹ A red and yellow handle may be selected instead of the standard gray and black handle. Change "WG" suffix to "WJ". Ex: Change CXU7-9-10-✱-0.16A-A10-**WG** to CXU7-9-10-✱-0.16A-A10-**WJ**.

❺ Other voltages available, see Section A in this catalog. *Non-standard coil voltages not listed here must be ordered and installed separately as renewal parts.*

❻ KAIC Assembly Rating Index. See pages F73-F75 for Application Rating Guide.

❼ Catalog number (–A10) includes front-mounted auxiliary KT7-PE1-10 with 300 VAC maximum control circuit matching line voltage, or provided from separate source, used to de-energize contactor coil under fault condition (auxiliary not available for customer use). For control circuits greater than 300 VAC, which is common with line voltage, the auxiliary will not be wired into the control circuit since the contactor coil will be de-energized when KTA7 is tripped due to overload or short circuit; therefore, the KT7-PE1-10 auxiliary is available for customer use.

Enclosed Reversing Combination Controller, Electronic DC Coil - Type 4 / 12

Painted Steel, Type 4 / 12 Enclosure

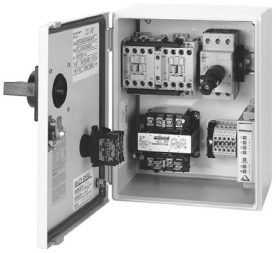

Amp / Horsepower Rating									
Max. Horsepower ❶❷❸ Three Phase				O/L Relay Ampere Range	Magnetic Response Current	Index ❻	Catalog Number ❹	Price	Dimension Code
200V	230V	460V	575V						
KTA7-25S Standard Interrupting Capacity									
~	~	~	~	0.10…0.16	2.1	1	CXU7-9E-22-✱-AS0.16A-A10-WG	1265	W6
~	~	~	~	0.16…0.25	3.3	2	CXU7-9E-22-✱-AS0.25A-A10-WG	1265	W6
~	~	~	~	0.25…0.40	5.2	3	CXU7-9E-22-✱-AS0.4A-A10-WG	1265	W6
~	~	~	~	0.40…0.63	8.2	4	CXU7-9E-22-✱-AS0.63A-A10-WG	1299	W6
~	~	~	1/2	0.63…1.0	13	5	CXU7-9E-22-✱-AS1.0A-A10-WG	1299	W6
~	~	1/2	3/4	1.0…1.6	21	6	CXU7-9E-22-✱-AS1.6A-A10-WG	1299	W6
1/2	1/2	1	1-1/2	1.6…2.5	33	7	CXU7-9E-22-✱-AS2.5A-A10-WG	1299	W6
3/4	3/4	2	3	2.5…4	52	8	CXU7-9E-22-✱-AS4.0A-A10-WG	1299	W6
1	1-1/2	3	~	4…6.3	82	9	CXU7-9E-22-✱-AS6.3A-A10-WG	1299	W6
2	3	5	~	6.3…10	130	11	CXU7-12E-22-✱-AS10A-A10-WG	1390	W6
3	~	10	~	10…16	208	12	CXU7-16E-22-✱-AS16A-A10-WG	1478	W6
5	5	~	~	14.5…20	260	15	CXU7-23E-22-✱-AS20A-A10-WG	1531	W6
KTA7-25H High Interrupting Capacity									
1/2	1/2	1	1-1/2	1.6…2.5	33	17	CXU7-9E-22-✱-AH2.5A-A10-WG	1363	W6
3/4	3/4	2	3	2.5…4	52	19	CXU7-9E-22-✱-AH4.0A-A10-WG	1363	W6
1	1-1/2	3	5	4…6.3	82	22	CXU7-9E-22-✱-AH6.3A-A10-WG	1363	W6
2	3	5	7-1/2	6.3…10	130	24	CXU7-12E-22-✱-AH10A-A10-WG	1499	W6
3	~	10	10	10…16	208	28	CXU7-16E-22-✱-AH16A-A10-WG	1550	W6
5	5	~	~	14.5…20	260	31	CXU7-23E-22-✱-AH20A-A10-WG	1604	W6
7-1/2	7-1/2	15	~	18…25	325	33	CXU7-23E-22-✱-AH25A-A10-WG	1604	W6
KTA7-45H High Interrupting Capacity									
2	3	5	7-1/2	6.3…10	130	36	CXU7-30E-22-✱-AH10A-A10-WG	1882	W7
3	~	10	10	10…16	208	37	CXU7-30E-22-✱-AH16A-A10-WG	1882	W7
5	5	~	15	14.5…20	260	38	CXU7-30E-22-✱-AH20A-A10-WG	1882	W7
~	7-1/2	20	20	18…25	325	39	CXU7-30E-22-✱-AH25A-A10-WG	1882	W7
7-1/2	10	20	25	23…32	416	41	CXU7-37E-22-✱-AH32A-A10-WG	2062	W7
10	10	25	30	32…45	585	45	CXU7-37E-22-✱-AH45A-A10-WG	2146	W7
10	15	30	~	32…45	585	46	CXU7-43E-22-✱-AH45A-A10-WG	2220	W7

Includes:

- Type 4 / 12 enclosure - watertight, dustight
- KT7 "Type E/F" Combination Motor Controller with 1 NO front mount Auxiliary Contact (Cat #: KT7-PE1-10)
- Terminal Adaptor for Type E Applications (Cat.# KT7-25[45]-TE)
- CA7 contactors (for remote operation), Electronic DC coil
- Power wiring
- Gray and black Type 4/4X/12; IP66 handle (Cat.# KT7-HTN) ❹
- Control power transformer, pilot device, terminals and other equipment shown are factory installed options

See page F107 for factory installed modifications

Contactor Electronic DC Coil Codes (✱) ❺

DC Coil Codes	Voltage
12E	12V
24E	**24V**
36E	36-48V
48E	48-72V
110E	110-125V
220E	220-250V

Ordering Instructions

Specify Catalog Number	
Replace (✱) with Coil Code Select modifications if required	**See Coil Code tables on this page for codes**

❶ **Horsepower ratings shown in the table above are for reference.** ***The final selection of the manual starter depends on the actual motor full load current and service factor.***

- For motor with service factor less than 1.15. Use motor nameplate full load current times 0.9 and choose the motor starter with the appropriate current range. Example: Motor FLC = 4.2A; S.F. = 1.0. 4.2A x 0.9 = 3.78A. Select catalog number KTA7-25S-4.0A.

❷ Magnetic trip is fixed at 13x the maximum value of the current adjustment range.

❸ CXU7 may be applied to single phase loads. Contact factory for these applications.

❹ A red and yellow handle may be selected instead of the standard gray and black handle. Change "WG" suffix to "WJ". Ex: Change CXU7-9E-10-✱-0.16A-A10-**WG** to CXU7-9E-10-✱-0.16A-A10-**WJ**.

❺ CXU7-9E…43E with electronic coils are not interchangeable with non-electronic DC or AC coils.

❻ KAIC Assembly Rating Index. See pages F73-F75 for Application Rating Guide.

Non-Reversing and Reversing CX7 Combination Controller Modifications (Factory Assembled)

Description	Add Suffix to Catalog Number	Price Adder
Pilot Devices ❶		
START-STOP multi-function pushbutton	-3U	195
ON-OFF multi-function pushbutton	-4U	195
FOR-STOP-REV multi-function pushbutton	-3U	350
UP-STOP-DOWN multi-function pushbutton	-4U	350
OPEN-STOP-CLOSE multi-function pushbutton	-5U	350
HAND-AUTO selector switch	-5	195
OFF-ON selector switch	-6	195
HAND-OFF-AUTO selector switch	-7	195
FOR-OFF-REV selector switch	-6	195
UP-OFF-DOWN selector switch	-7	195
OPEN-OFF-CLOSE selector switch	-8	195
Pilot light only ❸	-1	134
Pilot lights only (2) ❸	-2	260
Pilot light w/ START-STOP multi-function pushbutton ❸	-13U	330
Pilot light w/ ON-OFF multi-function pushbutton ❸	-14U	330
Pilot light w/ HAND-AUTO selector switch ❸	-15	330
Pilot light w/ OFF-ON selector switch ❸	-16	330
Pilot light w/ HAND-OFF-AUTO selector switch ❸	-17	330
Control Power Transformer		
(with fused primary and secondary)	Replace (✱) in catalog # with the following codes ❷	
Primary volts / *Secondary volts*		
50 watt Standard Capacity: 208 / 120	XA	320
240 / 120	XB	320
480 / 120	XC	320
575 / 120	XD	320
380 / 110	XG	320
240 / 24	XE	320
480 / 24	XF	320
600 / 24	XJ	320
KT7 Auxiliaries & Trip Contacts	**Change "-A10-" to ...**	**Adder**
Front mount 300V maximum		
1 NO Auxiliary	-A10	55
1 NC Auxiliary	-A01	55
1 NO + 1 NC Auxiliary	-A11	62
2 NO Auxiliaries	-A20	62
1 NO SC+OL + 1 NC Auxiliary	-T10A01	79
1 NO SC+OL + 1 NO Auxiliary	-T10A10	79
Side Mount 600V maximum		
2 NC Auxiliaries	-AS02	65
2 NO Auxiliaries	-AS20	65
1 NO + 1 NC Auxiliary	-AS11	65
1 NC SC+OL + 1 NO Auxiliary	-R10	85
1 NC SC+OL + 1 NC Auxiliary	-R11	85

Description	Add Suffix to Catalog Number	Price Adder
Additional KT7 Trip Contacts - Side Mount (600V max)		
1 NO SC+OL + 1 NO SC	-R00	94
1 NO SC+OL + 1 NC SC	-R01	94
1 NC SC+OL + 1 NO SC	-R10	94
KT7 Accessories		
Undervoltage Release Module (Select coil voltage from table below)	-UA-✱	126
Shunt Release Module	-AA-✱	126
CA7 Auxiliary Contacts		
1 NO Auxiliary	-S10	45
1 NC Auxiliary	-S01	45
1 NO + 1 NC Auxiliary	-S11	57
2 NO Auxiliaries	-S20	57
2 NC Auxiliaries	-S02	57
1 NO + 2 NC Auxiliary	-S12	64
2 NO + 1 NC Auxiliary	-S21	64
3 NO Auxiliaries	-S30	64
3 NC Auxiliaries	-S03	64
1 NO + 3 NC Auxiliary	-S13	75
3 NO + 1 NC Auxiliary	-S31	75
2 NO + 2 NC Auxiliary	-S22	75
4 NO Auxiliaries	-S40	75
4 NC Auxiliaries	-S04	75
Alternate Aux. Contact Arrangement (CA7 only)		
1 NC in lieu of standard 1 NO	-SX10	17
2 NC in lieu of standard 2 NO (on CXU7 only)	-SX2	17
CA7 Contactor Accessories		
Electronic Interface	-JE ❹	94
Surge Suppressor RC	-C	54
Surge Suppressor Varistor	-V	40
Unwired Terminal Blocks Specify quantity (▼)	-▼TB	22

-UA..-AA Coil Codes (✱)

AC Coil Code	Voltage Range 50 Hz	Voltage Range 60 Hz
24V	21V	24V
28V	24V	28V
120V	**105V**	**120V**
127V	110V	127V
230V	220...230V	~
240V	~	240...260V
277V	240V	277V
460V	380...400V	400...460V
480V	415V	480V
600V	550V	600V

This item is available in the ORANGE EXPRESS 3-day shipping program

❶ Currently supply D7 multi-function pushbuttons as standard which do not require protective boots to meet Type 4X.
See Section H in this catalog for description (all suffix's ending in "U").

❷ Factory modifications often change the enclosure size. Refer to factory for dimensions when critical to the installation.

❸ Pilot Lights may be applied with 24VAC/VDC, 120VAC or 240VAC Control Circuit. Pilot Lights with 380 VAC...575VAC require a control circuit transformer.

❹ CRI7E-24 will be used. CRI7E-12 by special order only.

CX7 Explosion Proof Combination Controllers - Type 7 / 9 with Type 4 Gaskets

Explosion Proof - Type 7 / 9 Enclosure
(with Type 4 Gaskets)

Amp / Horsepower Rating								
Max. Horsepower ❶❷❸ Three Phase				O/L Relay Ampere Range	Magnetic Response Current	Catalog Number ❺	Price	Dimension Code
200V	230V	460V	575V					
KTA7-25S Standard Interrupting Capacity								
~	~	~	~	0.10…0.16	2.1	**CX7-9-10-✱-AS0.16A-A10-EZ**	**2072**	EZ
~	~	~	~	0.16…0.25	3.3	**CX7-9-10-✱-AS0.25A-A10-EZ**	**2072**	EZ
~	~	~	~	0.25…0.40	5.2	**CX7-9-10-✱-AS0.4A-A10-EZ**	**2072**	EZ
~	~	~	~	0.40…0.63	8.2	**CX7-9-10-✱-AS0.63A-A10-EZ**	**2114**	EZ
~	~	~	1/2	0.63…1.0	13	**CX7-9-10-✱-AS1.0A-A10-EZ**	**2114**	EZ
~	~	1/2	3/4	1.0…1.6	21	**CX7-9-10-✱-AS1.6A-A10-EZ**	**2114**	EZ
1/2	1/2	1	1-1/2	1.6…2.5	33	**CX7-9-10-✱-AS2.5A-A10-EZ**	**2114**	EZ
3/4	3/4	2	3	2.5…4	52	**CX7-9-10-✱-AS4.0A-A10-EZ**	**2114**	EZ
1	1-1/2	3	~	4…6.3	82	**CX7-9-10-✱-AS6.3A-A10-EZ**	**2114**	EZ
2	3	5	~	6.3…10	130	**CX7-12-10-✱-AS10A-A10-EZ**	**2152**	EZ
3	~	10	~	10…16	208	**CX7-16-10-✱-AS16A-A10-EZ**	**2218**	EZ
5	5	~	~	14.5…20	260	**CX7-23-10-✱-AS20A-A10-EZ**	**2241**	EZ
KTA7-25H High Interrupting Capacity								
1/2	1/2	1	1-1/2	1.6…2.5	33	**CX7-9-10-✱-AH2.5A-A10-EZ**	**2188**	EZ
3/4	3/4	2	3	2.5…4	52	**CX7-9-10-✱-AH4.0A-A10-EZ**	**2188**	EZ
1	1-1/2	3	5	4…6.3	82	**CX7-9-10-✱-AH6.3A-A10-EZ**	**2188**	EZ
2	3	5	7-1/2	6.3…10	130	**CX7-12-10-✱-AH10A-A10-EZ**	**2280**	EZ
3	~	10	10	10…16	208	**CX7-16-10-✱-AH16A-A10-EZ**	**2303**	EZ
5	5	~	~	14.5…20	260	**CX7-23-10-✱-AH20A-A10-EZ**	**2326**	EZ
7-1/2	7-1/2	15	~	18…25	325	**CX7-23-10-✱-AH25A-A10-EZ**	**2326**	EZ
KTA7-45H High Interrupting Capacity								
2	3	5	7-1/2	6.3…10	130	**CX7-30-10-✱-AH10A-A10-EZ**	**2551**	EZ
3	~	10	10	10…16	208	**CX7-30-10-✱-AH16A-A10-EZ**	**2551**	EZ
5	5	~	15	14.5…20	260	**CX7-30-10-✱-AH20A-A10-EZ**	**2551**	EZ
~	7-1/2	20	20	18…25	325	**CX7-30-10-✱-AH25A-A10-EZ**	**2551**	EZ
7-1/2	10	20	25	23…32	416	**CX7-30-10-✱-AH32A-A10-EZ**	**2593**	EZ
10	10	25	30	32…45	585	**CX7-37-10-✱-AH45A-A10-EZ**	**2673**	EZ
10	15	30	~	32…45	585	**CX7-43-10-✱-AH45A-A10-EZ**	**2696**	EZ

❶ **Horsepower ratings shown in the table above are for reference.** ***The final selection of the manual starter depends on the actual motor full load current and service factor.***
- For motor with service factor less than 1.15. Use motor nameplate full load current times 0.9 and choose the motor starter with the appropriate current range. Example: Motor FLC = 4.2A; S.F. = 1.0. 4.2A x 0.9 = 3.78A. Select catalog number KTA7-25S-4.0A.

❷ Magnetic trip is fixed at 13x the maximum value of the current adjustment range.

❸ CX7 may be applied to single phase loads. See footnote 1 for device selection criteria. To order single phase unit, change "CX7" in catalog number to "CBX7". Three pole series connection will be provided. Ex: Change **CX7**-9-10-✱-0.16A-A10-WG to **CBX7**-9-10-✱-0.16A-A10-WJ.

❹ Other voltages available, see Section A in this catalog. *Non-standard coil voltages not listed here must be ordered and installed separately as renewal parts.*

❺ Catalog number (–A10) includes front-mounted auxiliary KT7-PE1-10 with 300 VAC maximum control circuit matching line voltage, or provided from separate source, used to de-energize contactor coil under fault condition (auxiliary not available for customer use). For control circuits greater than 300 VAC, which is common with line voltage, the auxiliary will not be wired into the control circuit since the contactor coil will be de-energized when KTA7 is tripped due to overload or short circuit; therefore, the KT7-PE1-10 auxiliary is available for customer use.

Includes:
- Class I, Div I, Group B, C & D – Class II, Div I, Group E, F & G enclosure Class III, Zone I, IIB & H2
- KT7 "Type E" Self-protected Combination Manual Motor Controller with 1 NO front mount auxiliary contact (Cat.# KT7-PE1-10)
- Terminal Adaptor for Combo Type E/F Applications (Cat.# KT7-25[45]-TE)
- CA7 contactor (for remote operation), AC coil
- Power wiring

Modifications (Factory Assembled)

KT7 Auxiliaries & Trip Contacts,	Change "A10" in Cat. # to...	Price Adder
Front Mount 300V max.		
1 NC Auxiliary	**-A01**	**55**
1 NO + 1 NC Auxiliary	**-A11**	**62**
2 NO Auxiliaries	**-A20**	**62**
1 NO SC+OL + 1 NC Auxiliary	**-T10A01**	**79**
1 NO SC+OL + 1 NO Auxiliary	**-T10A10**	**79**
Side Mount 600V max.		
2 NO Auxiliaries	**-AS20**	**65**
1 NO + 1 NC Auxiliary	**-AS11**	**65**
1 NC SC+OL + 1 NO Auxiliary	**-R10**	**85**
1 NC SC+OL + 1 NC Auxiliary	**-R11**	**85**
CA7 Contactor Accessories	**Add Suffix to Cat. Number**	**Price Adder**
1 NC Auxiliary	**-S01**	**45**
1 NO Auxiliary	**-S10**	**45**
Electronic Interface	**-JE**	**94**
Surge Suppressor RC	**-C**	**54**
Surge Suppressor Varistor	**-V**	**40**
Surge Suppressor Diode	**-D**	**52**
Enclosure Modifications		
Dual START/STOP pushbutton	**-3**	**195**
ON/OFF selector switch	**-6**	**195**
H-O-A	**-7**	**195**
Breather/Drain	**-BD**	**110**

Contactor AC Coil Codes (✱) ❹

AC Coil Code	Voltage Range 50 Hz	Voltage Range 60 Hz
24Z	**24V**	**24V**
120	**110V**	**120V**
208	~	208V
220W	**200V-220V**	**208V-240V**
240	220V	240V
277	240V	277V
380 ❺	380V-400V	440V
480 ❺	**440V**	**480V**
600 ❺	550v	600V

Ordering Instructions

Specify Catalog Number	
Replace (✱) with Coil Code Select modifications if required	**See tables on this page for codes**

Type E/F Simplex & Duplex Pump Controllers

CXP7-9...

Simplex Pump Controllers

A single KTA7 motor controller plus matching CA7 contactor can be combined in an enclosure as a Simplex Combination Controller for pumping applications. Additional space is provided for the customer to field addition of time clocks or float switches as required by the application. An environmentally approved thru-the-door handle provides for a required disconnect. These pump panels can be supplied with Suitable for Service Entrance (SUSE) label on demand. Type E/F pump panels are less expensive than the classic Construction Type A (Fusible) or Construction Type C (MCCB) versions shown in Section C of this catalog.

Type E/F Simplex Pump Controller Panels include:

- Contactor (with AC coil)
- Type E Self-protected motor controller
- "Start" Momentary Push Button
- "HOA" Selector Switch
- A minimum of 6" x 10" extra back pan space
- UL Type rated enclosure

Duplex Pump Controllers

Two starter duplex panels can be fed from one power source or two power sources and include lead/lag control circuitry to meet customers' need in pumping and many other applications. Two environmentally approved thru-the-door handle disconnect mechanisms means no main feeder device is required and smaller and less expensive panel than a classic duplex panel as offered in Section C of this catalog. The following pages include a selection of duplex controllers and you can contact your Sprecher + Schuh representative to modify the selection.

Type E/F Duplex Pump Controller Panels include:

- (2) Contactors (AC coil) and (2) Type E/F self protected motor controllers
- (1) Electronic alternating relay
- (1) UL type rated enclosure
- Designed per alternation control diagram shown at bottom of page F117

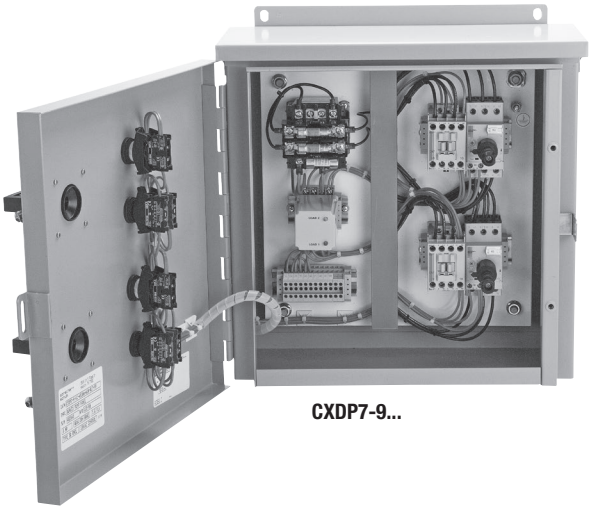

CXDP7-9...

Series CXP7 & Type E/F Combo Pump Panel

Max. Horsepower ❶❷❸ Three Phase				Current Adjustment Range (A)	Magnetic Response Current	Type 3R Rainproof (Metal) Catalog Number ❹❻	Price	Dimension Code	Type 4X Watertight Corrosion Resistant Non-metallic Catalog Number ❹❻	Price	Dimension Code
200V	230V	460V	575V								
KTA7-25S Standard Interrupting Capacity											
~	~	~	~	0.10…0.16	2.1	CXP7-9-10-✱-AS0.16A-A10-RG	1191	O	CXP7-9-10-✱-AS0.16A-A10-CG	R/F	R/F
~	~	~	~	0.16…0.25	3.3	CXP7-9-10-✱-AS0.25A-A10-RG	1191	O	CXP7-9-10-✱-AS0.25A-A10-CG	R/F	R/F
~	~	~	~	0.25…0.40	5.2	CXP7-9-10-✱-AS0.4A-A10-RG	1191	O	CXP7-9-10-✱-AS0.4A-A10-CG	R/F	R/F
~	~	~	~	0.40…0.63	8.2	CXP7-9-10-✱-AS0.63A-A10-RG	1191	O	CXP7-9-10-✱-AS0.63A-A10-CG	R/F	R/F
~	~	~	1/2	0.63…1.0	13	CXP7-9-10-✱-AS1.0A-A10-RG	1191	O	CXP7-9-10-✱-AS1.0A-A10-CG	R/F	R/F
~	~	1/2	3/4	1.0…1.6	21	CXP7-9-10-✱-AS1.6A-A10-RG	1191	O	CXP7-9-10-✱-AS1.6A-A10-CG	R/F	R/F
1/2	1/2	1	1-1/2	1.6…2.5	33	CXP7-9-10-✱-AS2.5A-A10-RG	1191	O	CXP7-9-10-✱-AS2.5A-A10-CG	R/F	R/F
3/4	3/4	2	3	2.5…4	52	CXP7-9-10-✱-AS4.0A-A10-RG	1191	O	CXP7-9-10-✱-AS4.0A-A10-CG	R/F	R/F
1	1-1/2	3	~	4…6.3	82	CXP7-9-10-✱-AS6.3A-A10-RG	1191	O	CXP7-9-10-✱-AS6.3A-A10-CG	R/F	R/F
2	3	5	~	6.3…10	130	CXP7-12-10-✱-AS10A-A10-RG	1236	O	CXP7-12-10-✱-AS10A-A10-CG	R/F	R/F
3	~	10	~	10…16	208	CXP7-16-10-✱-AS16A-A10-RG	1305	O	CXP7-16-10-✱-AS16A-A10-CG	R/F	R/F
5	5	~	~	14.5…20	260	CXP7-23-10-✱-AS20A-A10-RG	1332	O	CXP7-23-10-✱-AS20A-A10-CG	R/F	R/F
KTA7-25H High Interrupting Capacity											
1/2	1/2	1	1-1/2	1.6…2.5	33	CXP7-9-10-✱-AH2.5A-A10-RG	1270	O	CXP7-9-10-✱-AH2.5A-A10-CG	R/F	R/F
3/4	3/4	2	3	2.5…4	52	CXP7-9-10-✱-AH4.0A-A10-RG	1270	O	CXP7-9-10-✱-AH4.0A-A10-CG	R/F	R/F
1	1-1/2	3	5	4…6.3	82	CXP7-9-10-✱-AH6.3A-A10-RG	1270	O	CXP7-9-10-✱-AH6.3A-A10-CG	R/F	R/F
2	3	5	7-1/2	6.3…10	130	CXP7-12-10-✱-AH10A-A10-RG	1370	O	CXP7-12-10-✱-AH10A-A10-CG	R/F	R/F
3	~	10	10	10…16	208	CXP7-16-10-✱-AH16A-A10-RG	1395	O	CXP7-16-10-✱-AH16A-A10-CG	R/F	R/F
5	5	~	~	14.5…20	260	CXP7-23-10-✱-AH20A-A10-RG	1422	O	CXP7-23-10-✱-AH20A-A10-CG	R/F	R/F
7-1/2	7-1/2	15	~	18…25	325	CXP7-23-10-✱-AH25A-A10-RG	1422	O	CXP7-23-10-✱-AH25A-A10-CG	R/F	R/F
KTA7-45H High Interrupting Capacity											
2	3	5	7-1/2	6.3…10	130	CXP7-30-10-✱-AH10A-A10-RG	1601	Q	CXP7-30-10-✱-AH10A-A10-CG	R/F	R/F
3	~	10	10	10…16	208	CXP7-30-10-✱-AH16A-A10-RG	1601	Q	CXP7-30-10-✱-AH16A-A10-CG	R/F	R/F
5	5	~	15	14.5…20	260	CXP7-30-10-✱-AH20A-A10-RG	1601	Q	CXP7-30-10-✱-AH20A-A10-CG	R/F	R/F
~	7-1/2	20	20	18…25	325	CXP7-30-10-✱-AH25A-A10-RG	1601	Q	CXP7-30-10-✱-AH25A-A10-CG	R/F	R/F
7-1/2	10	20	25	23…32	416	CXP7-30-10-✱-AH32A-A10-RG	1601	Q	CXP7-30-10-✱-AH32A-A10-CG	R/F	R/F
10	10	25	30	32…45	585	CXP7-37-10-✱-AH45A-A10-RG	1722	Q	CXP7-37-10-✱-AH45A-A10-CG	R/F	R/F
10	15	30	~	32…45	585	CXP7-43-10-✱-AH45A-A10-RG	1757	Q	CXP7-43-10-✱-AH45A-A10-CG	R/F	R/F

NOTE: Catalog Numbers, list Prices and enclosure dimensions reflect contactors with AC coils. For DC coils, select Coil Code from the DC Coil Code table on page C96 and follow the instructions for modifying Catalog Numbers and list Prices.

R/F - Experience has shown that applications using non-metallic enclosures often require customized pump panels (i.e. Door-in-Door or unique control circuit). Contact your Sprecher + Schuh representative for a customized price.

Contactor AC Coil Codes (✱) ❺

AC Coil Code	Voltage Range 50 Hz	Voltage Range 60 Hz
24Z	24V	24V
120	110V	120V
208	~	208V
220W	200V-220V	208V-240V
240	220V	240V
277	240V	277V
380 ❻	380V-400V	440V
480 ❻	440V	480V
600 ❻	550v	600V

Ordering Instructions

Specify Catalog Number	
Replace (✱) with Coil Code Factory Modifications available	**See this page** **See pages C99-C103**

❶ **Horsepower ratings shown in the table above are for reference.** ***The final selection of the manual starter depends on the actual motor full load current and service factor.***
- For motor with service factor less than 1.15. Use motor nameplate full load current times 0.9 and choose the motor starter with the appropriate current range. Example: Motor FLC = 4.2A; S.F. = 1.0. 4.2A x 0.9 = 3.78A. Select catalog number KTA7-25S-4.0A.

❷ Magnetic trip is fixed at 13x the maximum value of the current adjustment range.

❸ CXP7 may be applied to single phase loads. See footnote 1 for device selection criteria. To order single phase unit, change "CXP7" in catalog number to "CBX7". Three pole series connection will be provided. Ex: Change **CXP7**-9-10-✱-0.16A-A10-RG to **CBXP7**-9-10-✱-0.16A-A10-RG.

❹ A red and yellow handle may be selected instead of the standard gray and black handle. Change "RG" suffix to "RJ". Ex: Change CXP7-9-10-✱-0.16A-A10-**RG** to CXP7-9-10-✱-0.16A-A10-**RJ**.

❺ Other voltages available, see Section A in this catalog. *Non-standard coil voltages not listed here must be ordered and installed separately as renewal parts.*

❻ Catalog number (–A10) includes front-mounted auxiliary KT7-PE1-10 with 300 VAC maximum control circuit matching line voltage, or provided from separate source, used to de-energize contactor coil under fault condition (auxiliary not available for customer use). For control circuits greater than 300 VAC, which is common with line voltage, the auxiliary will not be wired into the control circuit since the contactor coil will be de-energized when KTA7 is tripped due to overload or short circuit; therefore, the KT7-PE1-10 auxiliary is available for customer use.

Series CXDP7 with Type E/F Combination Controller

Max. Horsepower Three Phase 200V	230V	460V	575V	Current Adjustment Range (A)	Magnetic Response Current	Type 3R Rainproof (Metal) Catalog Number ❷	Price	Dimension Code	Type 4X Watertight Corrosion Resistant Non-metallic Catalog Number ❷	Price	Dimension Code
KTA7-25S Standard Interrupting Capacity											
~	~	~	~	0.10…0.16	2.1	CXDP7-9-10-✱-AS0.16A-A10-RG	R/F		CXDP7-9-10-✱-AS0.16A-A10-CG	R/F	R/F
~	~	~	~	0.16…0.25	3.3	CXDP7-9-10-✱-AS0.25A-A10-RG	R/F		CXDP7-9-10-✱-AS0.25A-A10-CG	R/F	R/F
~	~	~	~	0.25…0.40	5.2	CXDP7-9-10-✱-AS0.4A-A10-RG	R/F		CXDP7-9-10-✱-AS0.4A-A10-CG	R/F	R/F
~	~	~	~	0.40…0.63	8.2	CXDP7-9-10-✱-AS0.63A-A10-RG	R/F		CXDP7-9-10-✱-AS0.63A-A10-CG	R/F	R/F
~	~	~	1/2	0.63…1.0	13	CXDP7-9-10-✱-AS1.0A-A10-RG	R/F		CXDP7-9-10-✱-AS1.0A-A10-CG	R/F	R/F
~	~	1/2	3/4	1.0…1.6	21	CXDP7-9-10-✱-AS1.6A-A10-RG	R/F		CXDP7-9-10-✱-AS1.6A-A10-CG	R/F	R/F
1/2	1/2	1	1-1/2	1.6…2.5	33	CXDP7-9-10-✱-AS2.5A-A10-RG	R/F		CXDP7-9-10-✱-AS2.5A-A10-CG	R/F	R/F
3/4	3/4	2	3	2.5…4	52	CXDP7-9-10-✱-AS4.0A-A10-RG	R/F		CXDP7-9-10-✱-AS4.0A-A10-CG	R/F	R/F
1	1-1/2	3	~	4…6.3	82	CXDP7-9-10-✱-AS6.3A-A10-RG	R/F		CXDP7-9-10-✱-AS6.3A-A10-CG	R/F	R/F
2	3	5	~	6.3…10	130	CXDP7-12-10-✱-AS10A-A10-RG	R/F		CXDP7-12-10-✱-AS10A-A10-CG	R/F	R/F
3	~	10	~	10…16	208	CXDP7-16-10-✱-AS16A-A10-RG	R/F		CXDP7-16-10-✱-AS16A-A10-CG	R/F	R/F
5	5	~	~	14.5…20	260	CXDP7-23-10-✱-AS20A-A10-RG	R/F		CXDP7-23-10-✱-AS20A-A10-CG	R/F	R/F
KTA7-25H High Interrupting Capacity											
1/2	1/2	1	1-1/2	1.6…2.5	33	CXDP7-9-10-✱-AH2.5A-A10-RG	R/F		CXDP7-9-10-✱-AH2.5A-A10-CG	R/F	R/F
3/4	3/4	2	3	2.5…4	52	CXDP7-9-10-✱-AH4.0A-A10-RG	R/F		CXDP7-9-10-✱-AH4.0A-A10-CG	R/F	R/F
1	1-1/2	3	5	4…6.3	82	CXDP7-9-10-✱-AH6.3A-A10-RG	R/F		CXDP7-9-10-✱-AH6.3A-A10-CG	R/F	R/F
2	3	5	7-1/2	6.3…10	130	CXDP7-12-10-✱-AH10A-A10-RG	R/F		CXDP7-12-10-✱-AH10A-A10-CG	R/F	R/F
3	~	10	10	10…16	208	CXDP7-16-10-✱-AH16A-A10-RG	R/F		CXDP7-16-10-✱-AH16A-A10-CG	R/F	R/F
5	5	~	~	14.5…20	260	CXDP7-23-10-✱-AH20A-A10-RG	R/F		CXDP7-23-10-✱-AH20A-A10-CG	R/F	R/F
7-1/2	7-1/2	15	~	18…25	325	CXDP7-23-10-✱-AH25A-A10-RG	R/F		CXDP7-23-10-✱-AH25A-A10-CG	R/F	R/F
KTA7-45H High Interrupting Capacity											
2	3	5	7-1/2	6.3…10	130	CXDP7-30-10-✱-AH10A-A10-RG	R/F		CXDP7-30-10-✱-AH10A-A10-CG	R/F	R/F
3	~	10	10	10…16	208	CXDP7-30-10-✱-AH16A-A10-RG	R/F		CXDP7-30-10-✱-AH16A-A10-CG	R/F	R/F
5	5	~	15	14.5…20	260	CXDP7-30-10-✱-AH20A-A10-RG	R/F		CXDP7-30-10-✱-AH20A-A10-CG	R/F	R/F
~	7-1/2	20	20	18…25	325	CXDP7-30-10-✱-AH25A-A10-RG	R/F		CXDP7-30-10-✱-AH25A-A10-CG	R/F	R/F
7-1/2	10	20	25	23…32	416	CXDP7-30-10-✱-AH32A-A10-RG	R/F		CXDP7-30-10-✱-AH32A-A10-CG	R/F	R/F
10	10	25	30	32…45	585	CXDP7-37-10-✱-AH45A-A10-RG	R/F		CXDP7-37-10-✱-AH45A-A10-CG	R/F	R/F
10	15	30	~	32…45	585	CXDP7-43-10-✱-AH45A-A10-RG	R/F		CXDP7-43-10-✱-AH45A-A10-CG	R/F	R/F

Note: Catalog numbers, list prices and enclosure dimensions reflect contactors with AC coils. For DC coils, select Coil Code from the DC Coil Code table on page C96 and follow the instructions for modifying catalog numbers and list prices.

R/F - Experience has shown that applications using non-metallic enclosures often require customized pump panels (i.e. Door-in-Door or unique control circuit). Contact your Sprecher + Schuh representative for a customized price.

Contactor
AC Coil Codes (✱) ❶

AC Coil Code	Voltage Range 50 Hz	60 Hz
24Z	**24V**	**24V**
120	**110V**	**120V**
208	~	208V
220W	**200V-220V**	**208V-240V**
240	220V	240V
277	240V	277V
380 ❷	380V-400V	440V
480 ❷	**440V**	**480V**
600 ❷	550v	600V

Ordering Instructions

Specify Catalog Number	
Replace (✱) with Coil Code	**See this page**
Factory Modifications available	**See pages C99-C103**

❶ Other voltages available, see Section A in this catalog. *Non-standard coil voltages not listed here must be ordered and installed separately as renewal parts.*

❷ Catalog number (–A10) includes front-mounted auxiliary KT7-PE1-10 with 300 VAC maximum control circuit matching line voltage, or provided from separate source, used to de-energize contactor coil under fault condition (auxiliary not available for customer use). For control circuits greater than 300 VAC, which is common with line voltage, the auxiliary will not be wired into the control circuit since the contactor coil will be de-energized when KTA7 is tripped due to overload or short circuit; therefore, the KT7-PE1-10 auxiliary is available for customer use.

Custom Multi-Starter Control Panels

From 10 to 100 or more, consult the experts

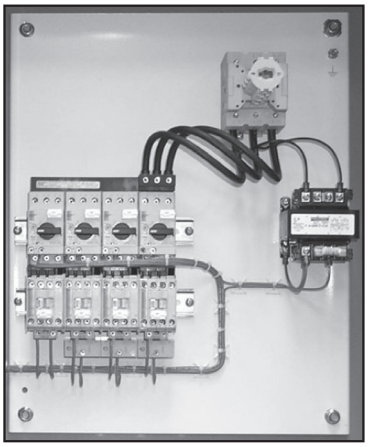

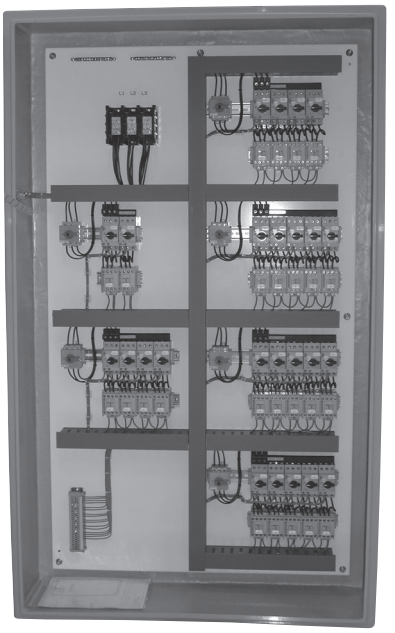

Your Motor Control + Protection Consultant

Sprecher + Schuh's slogan is "Motor control + protection consultant". This means part of our job is to be knowledgeable about these issues and to help customers choose components that not only comply with UL, NEC and CSA standards but also maximizes the SCCR rating of the assembled multi-starter panel leading to increased protection of equipment and personnel.

Multiple KTA7, KTB7 or KTC7 motor controllers plus matching CA7 contactors can be combined in a single assembly as a multi-motor starter custom control panel. Three, 33, 133 or more motor controllers and KTU7 molded case circuit breakers, as well as other power components and control circuits can be designed and assembled into a custom multi-motor starter by Sprecher + Schuh to meet customers' unique application requirements. These pages include a few pictures of custom multi-starter control panels built by Sprecher + Schuh. Contact your Sprecher + Schuh motor control and protection representative for consultation regarding design, quotations, or help explaining the complex UL, NEC and CSA codes that apply to a custom assembly.

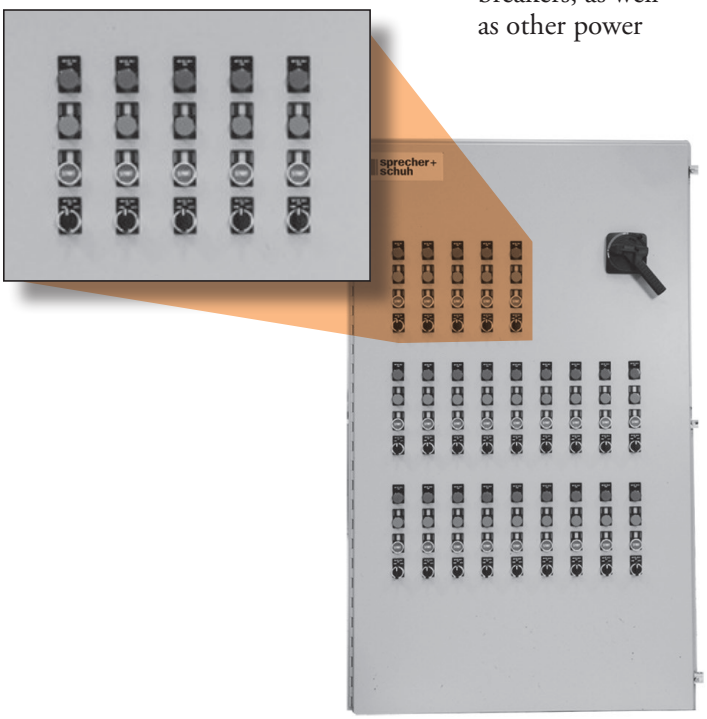

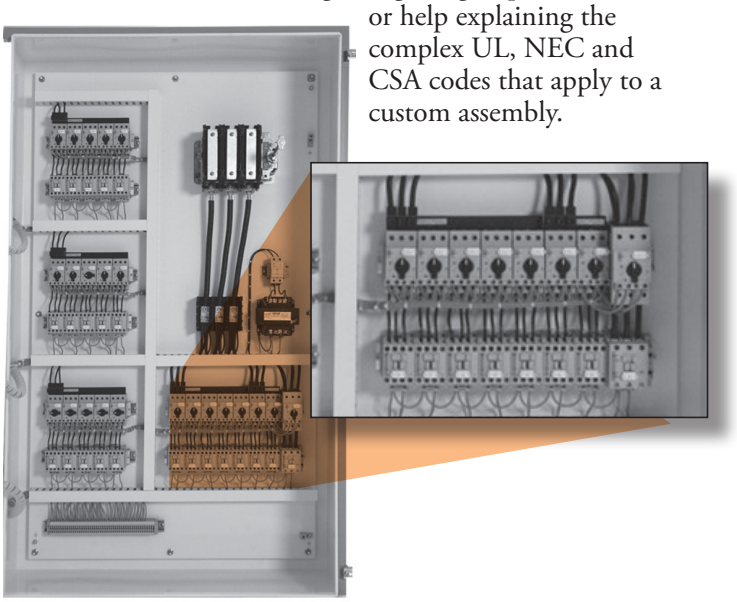

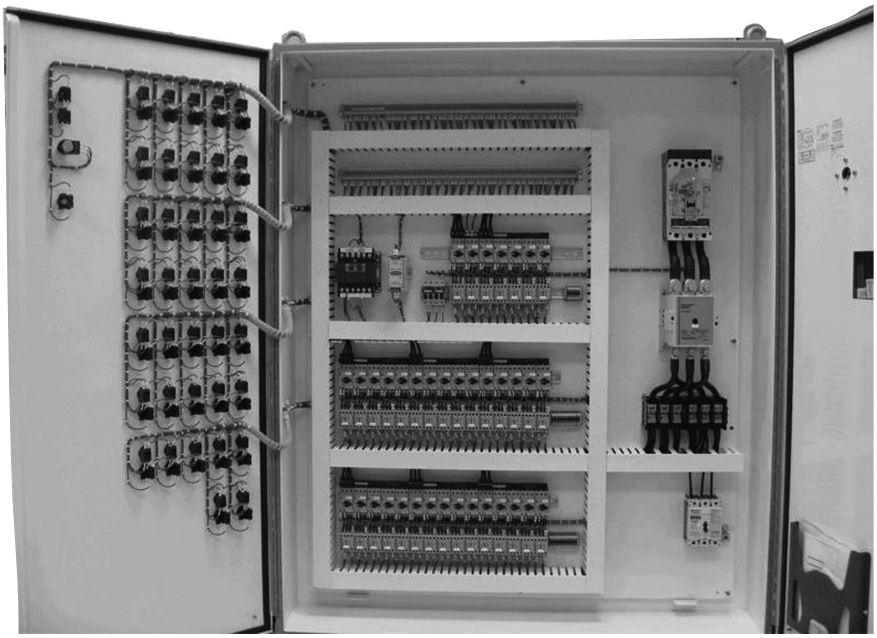

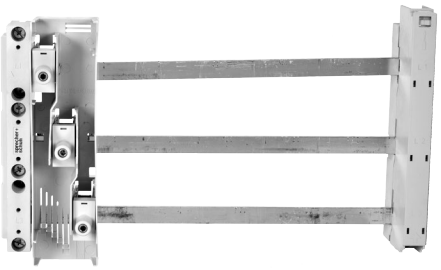

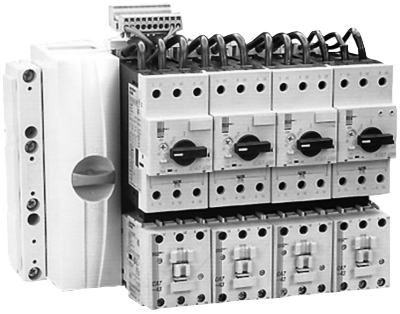

F

Short Circuit Current Ratings (SSCR)

Short Circuit Current Ratings as defined by UL is the current hot topic of discussion within the controls marketplace.

UL 508A Industrial Control Panel specifications require every multiple motor starter panel assembly to be labeled with the Short-Circuit Current Rating (SCCR), which depends on the weakest component's KAIC rating. The SCCR rules are complicated and UL has been conducting classes around the country on this subject. Sprecher + Schuh recently conducted a survey of multi-starter panel builders which indicated an increasing concern on the part of panel builders to comply with the relatively new UL regulations; yet many do not truly understand the complexity of the rules. This is another reson to consult the experts at Sprecher + Schuh.

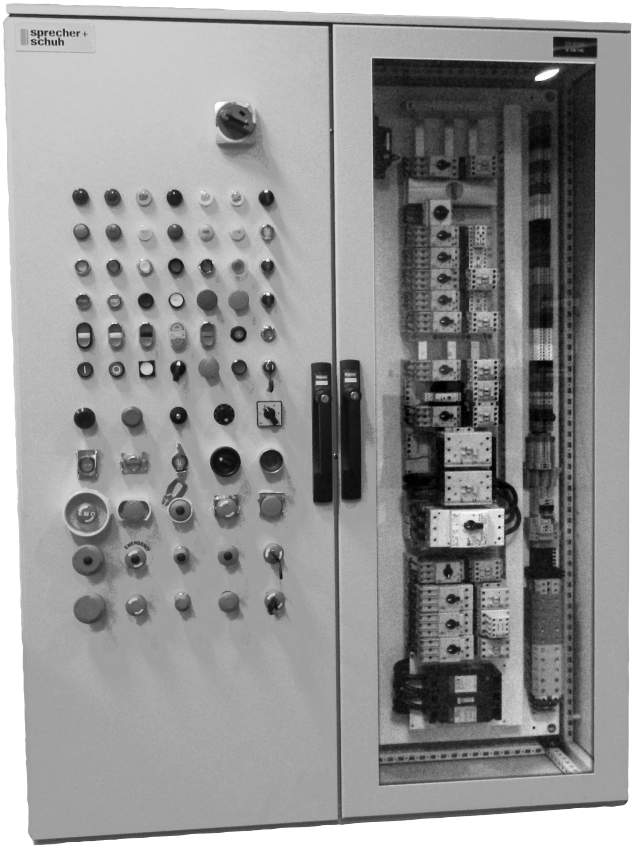

3-Phase 60mm Bus Bar System vertically arranged to maximize space

Custom Bus Bar Systems

Sprecher + Schuh has teamed-up with *Wöhner* to supply 3-phase 60 mm bus bar systems. Bus Bar systems offers more flexibility, smaller and more economical alternative to a Motor Control Center that uses 'bucket' design.

- Sprecher + Schuh can supply 3-phase 60 mm bus bar components for customer assembly into a control panel.
- We can help design a 3-phase 60 mm bus bar system and provide it with or without components and ship to the customer as open assembly.
- Sprecher + Schuh can help design a 3-phase 60 mm bus bar system and integrate that bus system into an enclosed assembly or multi-starter custom control panel to meet customers' unique specifications.

Please contact your local Sprecher + Schuh Representative or our Technical Support Team to help design our components to meet your needs, which can include building the custom control.

IP Ratings Definitions

IP Ratings Definitions The first IP number (left side of chart) is protection against solid objects. The second IP number (across top) is protection against liquids. The chart itself shows degrees of protection according to IEC 529.	No protection	Protected against vertically falling drops of water (condensation)	Protected against dripping water with enclosure up to 15° from vertical	Protected against sprayed water up to 60° from vertical	Protected against sprayed water from all directions (limited ingress permitted)	Protected against low pressure water jets from all directions (limited ingress permitted)	Protected against strong jets of water from all directions	1 meter Protected against immersion up to one meter	Protected against long periods of immersion under pressure
	IP…0	**IP…1**	**IP…2**	**IP…3**	**IP…4**	**IP…5**	**IP…6**	**IP…7**	**IP…8**
IP0… No protection	**IP00**								
IP1… Protected against solid objects up to 50mm (accidental touch by hands)	**IP10**	**IP11**	**IP12**						
IP2… Protected against solid objects up to 12mm (fingers, knuckles)	**IP20**	**IP21**	**IP22**	**IP23**					
IP3… Protected against solid objects up to 2.5mm (tools, wires)	**IP30**	**IP31**	**IP32**	**IP33**	**IP34**				
IP4… Protected against solid objects up to 1mm (wires)	**IP40**	**IP41**	**IP42**	**IP43**	**IP44**				
IP5… Protected against dust (limited engress permitted)	**IP50**			**IP53**	**IP54**	**IP55**	**IP56**		
IP6… Totally protected against dust	**IP60**					**IP65**	**IP66**	**IP67**	

NEMA / UL Type Definitions

	NEMA / UL Type								
	Indoor Use			Outdoor Use		Indoor or Outdoor Use			
For a degree of protection against:	1	12	13	3R	3	4	4X	6P	6
Incidental contact with enclosed equipment	•	•	•	•	•	•	•	•	•
Falling dirt	•	•	•	•	•	•	•	•	•
Rust	•	•	•	•	•	•	•	•	•
Circulating dust, lint, fibers and flyings		•	•		•	•	•	•	•
Windblown dust					•	•	•	•	•
Falling liquids and light splashing		•	•		•	•	•	•	•
Rain (limited water allowed inside)				•	•	•	•	•	•
Rain (no water allowed inside)					•	•	•	•	•
Snow and sleet				•	•	•	•	•	•
Hosedown and splashing water						•	•	•	•
Occasional prolonged submersion								•	•
Oil or coolant spraying or splashing			•						
Corrosive agents							•	•	
Occasional temporary submersion								•	•

Single, Two and Three Phase Connection Diagram

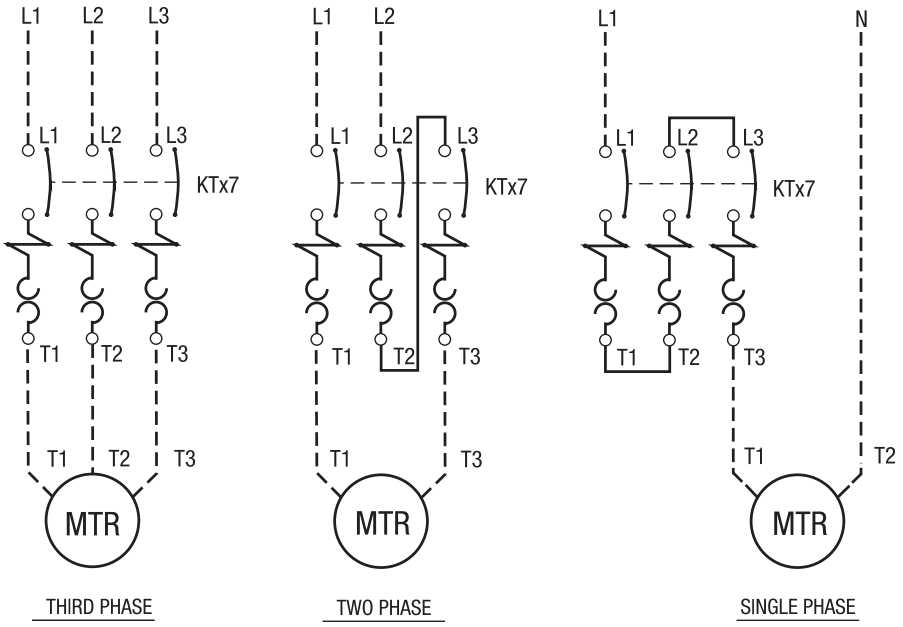

Type E/F Combination Controller Full Voltage Non-Reversing

AC Control with D7 Series Pilot Devices

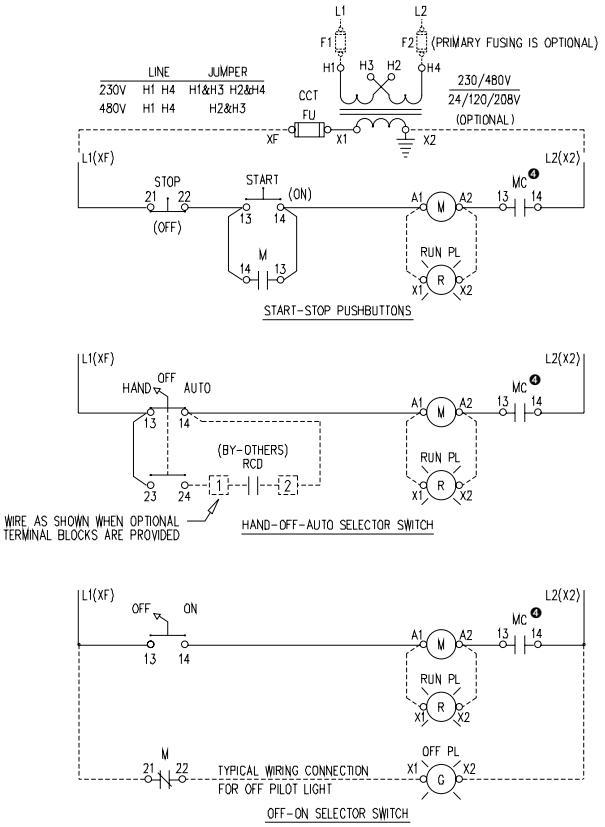

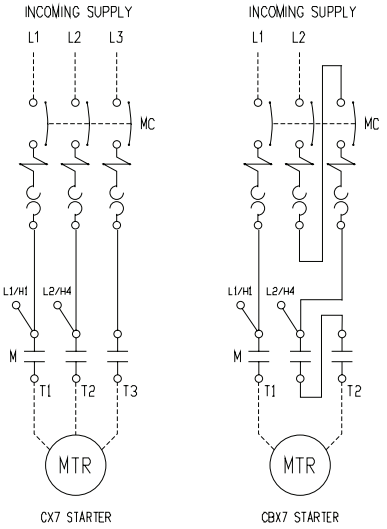

NOTES:
1) RCD: STANDS FOR REMOTE CONTROL DEVICE BY CUSTOMER
2) MC: KT7 "TYPE E" MOTOR CONTROLLER
3) X2 TERMINAL GROUNDED AS STANDARD, REMOVE GROUND IF NOT REQUIRED
4) TYPICAL FOR CONTROL CIRCUITS 300V AC OR LESS

KTA7 Type E/F Combination 3-PH FVNR Duplex Alternating Panel
with H-O-A, Lead, Lag and Stop 1-Pole Float Switches

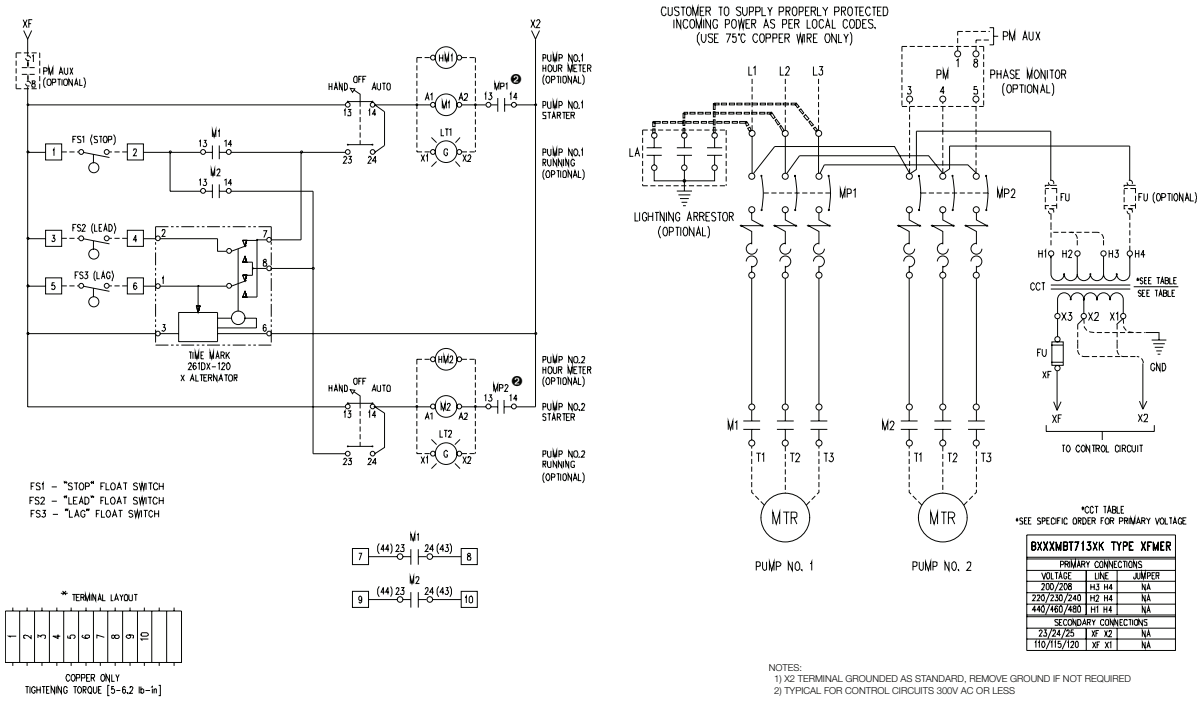

*CCT TABLE
*SEE SPECIFIC ORDER FOR PRIMARY VOLTAGE

BXXXMBT713XK TYPE XFMER		
PRIMARY CONNECTIONS		
VOLTAGE	LINE	JUMPER
200/208	H3 H4	NA
220/230/240	H2 H4	NA
440/460/480	H1 H4	NA
SECONDARY CONNECTIONS		
23/24/25	XF X2	NA
110/115/120	XF X1	NA

NOTES:
1) X2 TERMINAL GROUNDED AS STANDARD, REMOVE GROUND IF NOT REQUIRED
2) TYPICAL FOR CONTROL CIRCUITS 300V AC OR LESS

KTA7 Type E/F Combination 3-PH FVNR Duplex Alternating Panel
with H-O-A, Alarm Circuit, Lead, Lag, Stop, 1-Pole Float Switches

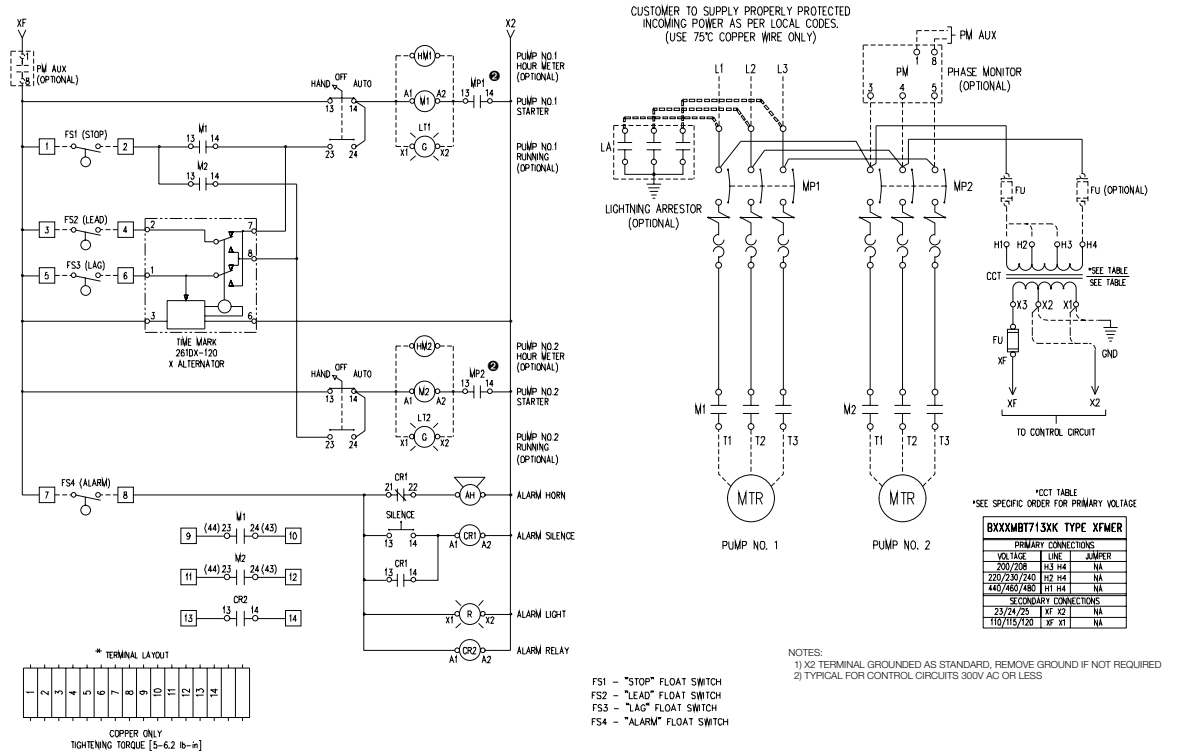

*CCT TABLE
*SEE SPECIFIC ORDER FOR PRIMARY VOLTAGE

BXXXMBT713XK TYPE XFMER		
PRIMARY CONNECTIONS		
VOLTAGE	LINE	JUMPER
200/208	H3 H4	NA
220/230/240	H2 H4	NA
440/460/480	H1 H4	NA
SECONDARY CONNECTIONS		
23/24/25	XF X2	NA
110/115/120	XF X1	NA

NOTES:
1) X2 TERMINAL GROUNDED AS STANDARD, REMOVE GROUND IF NOT REQUIRED
2) TYPICAL FOR CONTROL CIRCUITS 300V AC OR LESS

ECombo/EComboPlus/CX7 KWIKstarters Non-Reversing

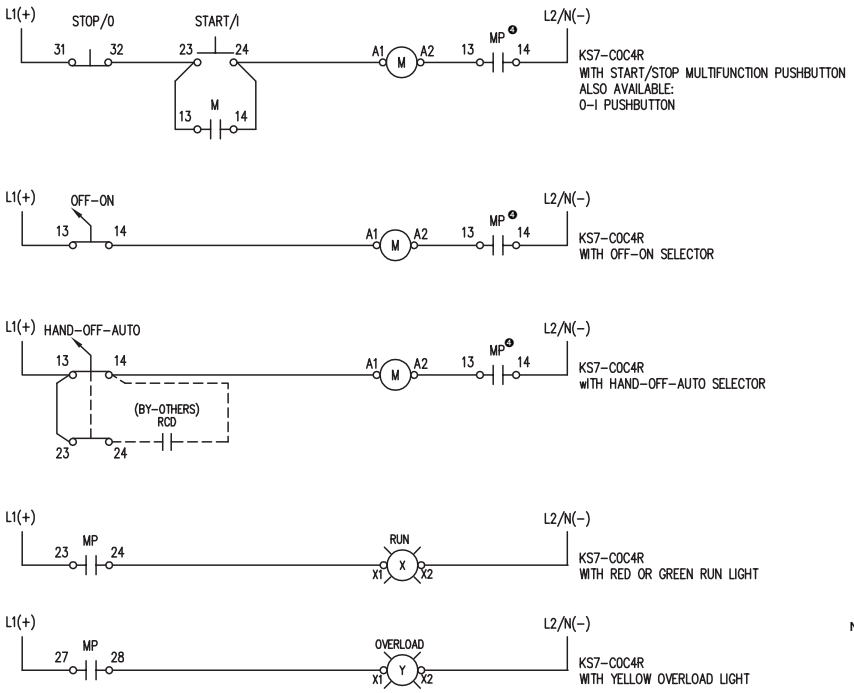

CUSTOMER TO SUPPLY PROPER BRANCH CIRCUIT PROTECTION AS PER LOCAL CODES. (USE 75°C COPPER WIRE ONLY)

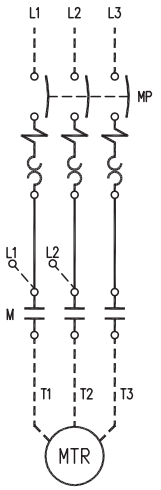

CX7

NOTES:
1) MP: KT7 "TYPE E" MOTOR CONTROLLER
2) DO NOT CONNECT A1-A2 TO L1-L2 UNLESS COIL VOLTAGE MATCHES LINE VOLTAGE
3) OPTIONAL RUN LIGHT, MAY BE RED OR GREEN
4) TYPICAL FOR CONTROL CIRCUITS 300V AC OR LESS

ECombo/EComboPlus/CXU7 KWIKstarters Reversing

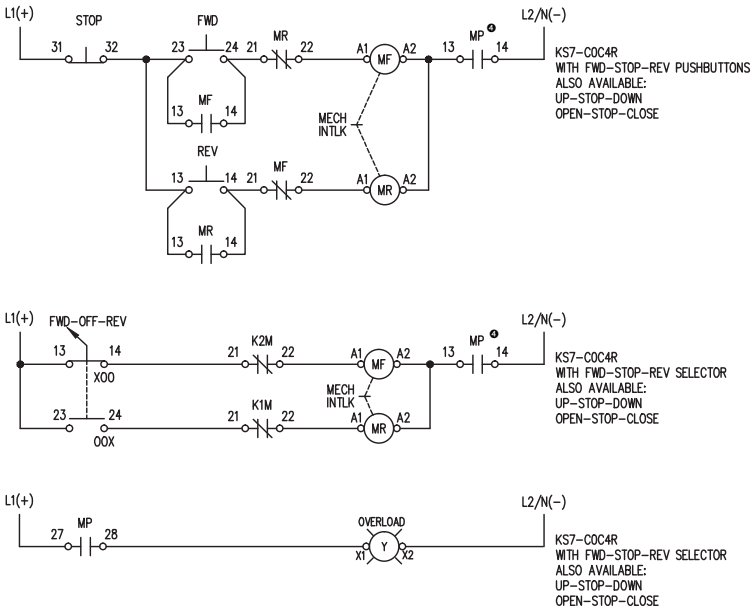

CUSTOMER WILL PROVIDE BRANCH CIRCUIT PROTECTION (F1)
SEE THE APPLICATION INSTRUCTION SHEET – COMPONENT SELECTION TABLES FOR MAX. FUSE SIZE, CLASS, AND APPLICABLE SHORT CIRCUIT RATING
(USE 75°C COPPER WIRE ONLY)

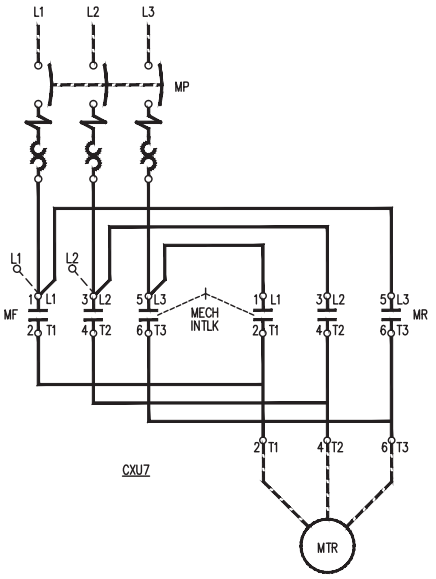

CXU7

NOTES:
1) MECHANICAL INTERLOCK
2) MP: KT7 "TYPE E" MOTOR CONTROLLER
3) DO NOT CONNECT A1-A2 TO L1-L2 UNLESS COIL VOLTAGE MATCHES LINE VOLTAGE
4) TYPICAL FOR CONTROL CIRCUITS 300V AC OR LESS

CX7/CXU7 KWIKstarter Enclosure KS7-COC4R *(Dimension Code Q4)*

Dimensions are in decimal inches. Dimensions not intended for manufacturing purposes.

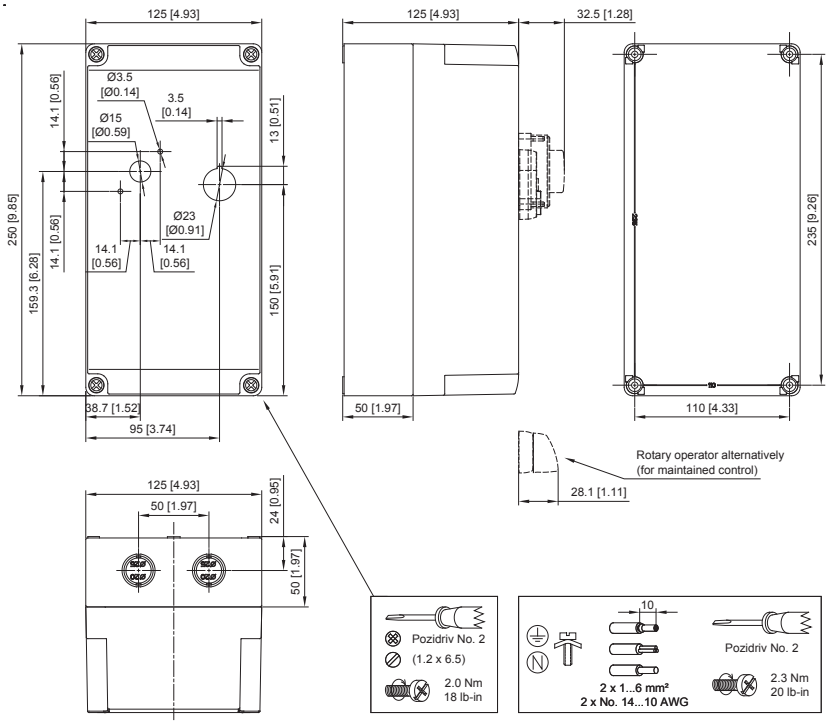

Enclosure Dimensions

Dimensions are in decimal inches. Dimensions not intended for manufacturing purposes. See dimension drawings on next page.

IP65 ENCLOSURE

Encl. ID Dim.	Figure No.	Enclosure Size A	Enclosure Size B	Enclosure Size C	Mtg Depth D	Mtg Centers E	Mtg Centers F	Panel Size Sub-Pan	Panel Size Sub-Pan
AY	1	5.91	3.54	5.12	N/A	N/A	5.32	N/A	N/A

TYPE-4/4X/12 ENCLOSURE

Encl. ID Dim.	Figure No.	Enclosure Size A	Enclosure Size B	Enclosure Size C	Mtg Depth D	Mtg Centers E	Mtg Centers F	Panel Size Sub-Pan	Panel Size Sub-Pan
Q5	2	7.00	5.03	7.35	4.3	4.21	6.18	N/A	N/A
Q6	3	7.00	7.00	8.35	5.3	6.18	6.18	N/A	N/A
Q7	4	11.87	7.31	10.6	7.23	6.54	11.10	N/A	N/A

TYPE-4/12 & 12 ENCLOSURES

Encl. ID Dim.	Figure No.	Enclosure Size A	Enclosure Size B	Enclosure Size C	Mtg Depth D	Mtg Centers E	Mtg Centers F	Panel Size Sub-Pan	Panel Size Sub-Pan	H
W6	5	9.84	7.87	8.24	5.31	5.31	9.13	9.09	7.13	-
W7	5	13.78	11.81	10.2	7.28	9.25	13.07	13.03	11.06	-
L	6	8	6	8.33	5.53	4	8.75	6.75	4.88	9.5

TYPE 7/9 ENCLOSURES

Encl. ID Dim.	Figure No.	Mtg. Dim. A	Mtg. Dim. B	Mtg. Dim. C	Inside Dim. D	Outside Dim. E	Outside Dim. F	Outside Dim. G	Outside Dim. H	Conduit Entry Top & Bot
EX	7	3.25	8.0	3.50	6.0	3.50	4.688	7.25	4.50	0.75
EY	8	6.375	2.125	4.0	6.0	5.0	7.375	9.375	6.0	1.0
EZ	8	9.125	4.50	6.0	8.0	6.75	10.438	12.50	8.375	1.50

Enclosures

See Enclosure Dimension Charts on Previous Page.

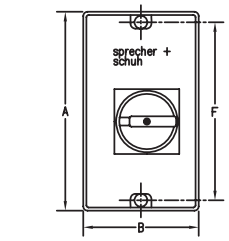

FIGURE NO. 1

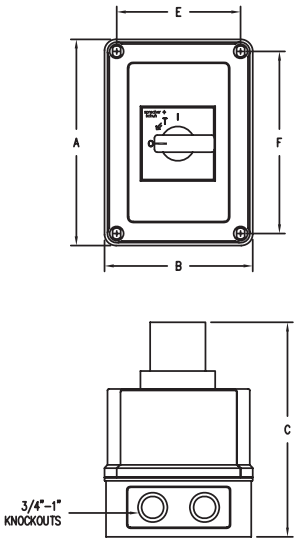

FIGURE NO. 2

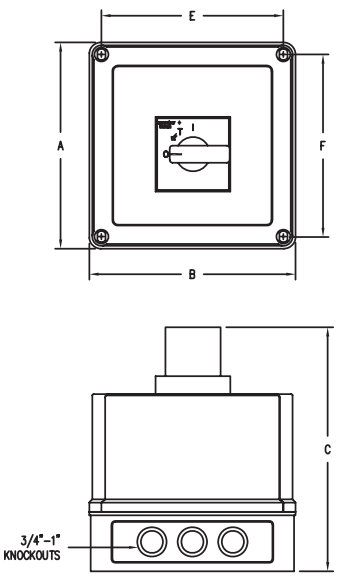

FIGURE NO. 3

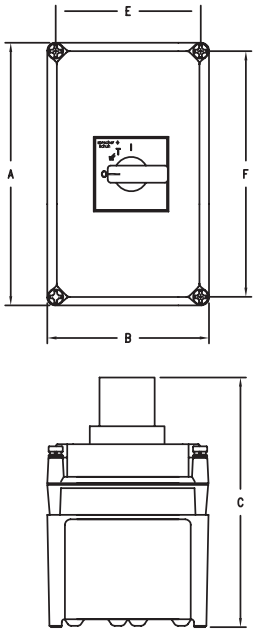

FIGURE NO. 4

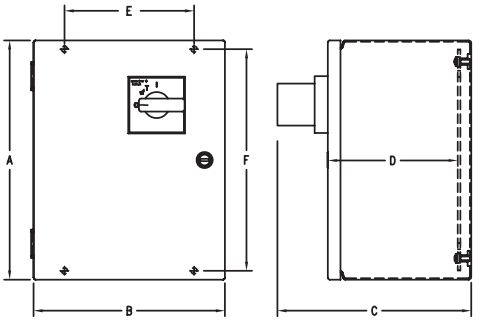

TYPE 4/12
FIGURE NO. 5

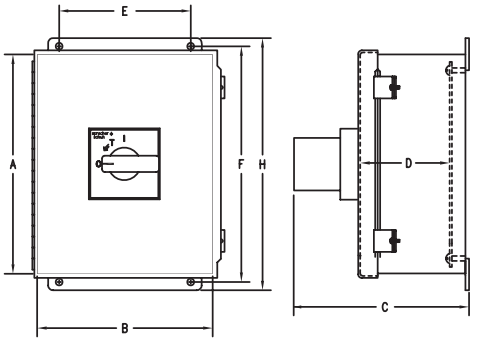

TYPE 12
FIGURE NO. 6

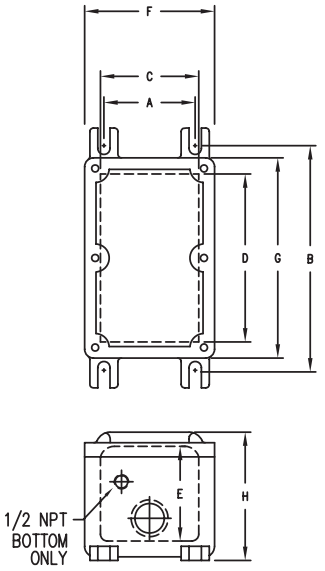

FIGURE NO. 7

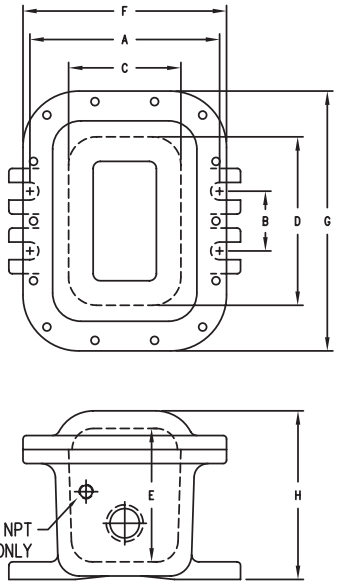

FIGURE NO. 8

Methods of Applying KT7

Motor Circuit Controllers & Molded Case Circuit Breakers

This information is provided to aid in proper system design and utilization of the KTA7, KTB7 & KTC7 Motor Circuit Controller in North American applications. UL approved Molded Case Circuit Breakers (KTU7) are also explained.

sprecher+schuh

Methods of Applying KT7 Motor Circuit Controllers

The KT7 Motor Circuit Controller provides Class 10 overload protection, as well as, current limiting short-circuit protection for individual motor loads. KT7s are also approved for use as circuit breakers (per IEC 947-6-2) for applications outside of North America. In the United States and Canada, however, they are UL/CSA listed as Manual Starters with optional approvals for Motor Disconnecting and Group Motor applications.

KT7 Motor Circuit Controllers are also UL/CSA listed as Self-Protected Combination (Type E) Starters, eliminating the requirement for additional short-circuit protection in many applications. This reduces both panel space and cost in multi-motor installations and eliminates the restrictive NEC/CEC rules that pertained to Manual Starters used in Group Motor applications.

The following information is provided to aid in proper system design and utilization of the capabilities of the KT7 Motor Circuit Controller in North American applications. *Please be sure to consider all applicable local and national codes for your particular installation.*

Circuit Breaker Applications – IEC

KT7 Motor Circuit Controllers are current limiting IEC circuit breakers (IEC 947-6-2) that also provide Class 10 motor overload protection. Additionally, they meet IEC requirements for applications such as:

- Disconnector (IEC 947-2)
- Main Switch (IEC 204-1)
- Emergency Off (IEC 204-1)
- Revision Service Switch (IEC 947)

A KT7 Motor Circuit Controller cannot be applied in North America as a circuit breaker because it does not meet the UL specifications for circuit breakers (UL 489).

Manual Starter Applications — UL/CSA

KT7 Motor Circuit Controllers are an excellent choice for manual starting applications. As UL/CSA listed manual motor controllers, they provide motor overload protection, however, a separate short-circuit protective device must still be used. The fuses or circuit breakers used for the short-circuit protection may be sized to the maximum allowable per NEC Article 430-52 in the U.S., and CEC Rule 28-200 in Canada. The KT7 as a manual motor starter is available in a general purpose enclosure, water tight enclosure, or Type 7/9 enclosure. Under-voltage or shunt trip relays are also available.

Traditional Group Motor Applications UL/CSA

KT7 Motor Circuit Controllers are also UL/CSA listed as manual starters for use in Group Motor installations. This listing (and application) has been popular in the United States because of the reduced panel space and cost savings it provides.

NEC article 430-52 states that each motor must have a Branch Circuit Protective Device (BCPD) consisting of a fused disconnect, fuse block & set of fuses, or a circuit breaker. A typical circuit is illustrated in Figure 1.

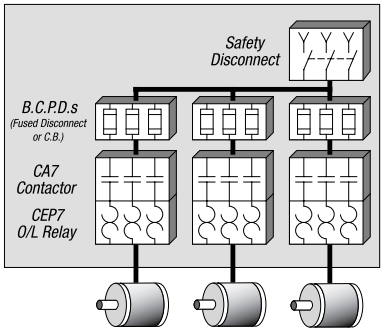

Figure 1
Classic Group Motor Circuit (NEC 430-52)

Even though this method is highly effective and widely used, it has several drawbacks.

- Breakers or fuse blocks for each motor circuit are expensive
- The panel space required to house many components like this is substantial
- Installations of this type are labor intensive and therefore more costly

NEC 430-53 [CEC 28-206] however, provides several exceptions to 430-52 [CEC 28-204] that allow you to connect a group of motors under one BCPD. These exceptions can be found under:

- 430-53(a) - For Motors 1 HP or Less
- 430-53(b) - The Smallest Motor is Protected
- 430-53(c) - Other Group Installations

Methods of Applying KT7 Motor Circuit Controllers *(continued)*

For example, Figure 2 illustrates how a circuit would look utilizing provision (a) or (b) above. What was once three branch circuits, with three BCPD's, is now one branch circuit with one BCPD.

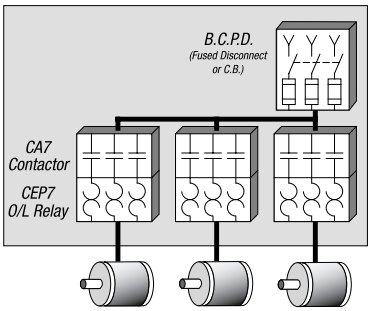

Figure 2
NEC Article 430-53 circuitry without KT7

It appears that the exceptions in 430-53 address the expensive drawbacks to having one BCPD for each motor. Expensive fuses (or circuit breakers) have been eliminated. Panel space has been significantly reduced, as well as the labor to install the circuit.

Unfortunately, NEC 430-53 (a) or (b) [CEC 28-602 (3)(b)] limits the group to a few small motors. However, by applying the KT7 under 430-53 (c) (Figure 3), the problems associated with 430-53 (a) and (b) are overcome.

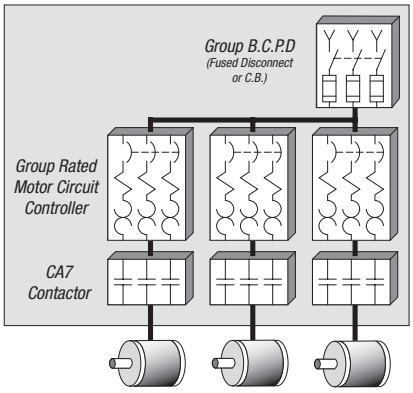

Figure 3
Article 430-53C Circuitry With KT7, KTA3 or KT4

- Only one fuse block (or circuit breaker) is used as the BCPD
- Panel size has been significantly reduced
- Wiring and installation time has been significantly reduced
- We have assured protection against low level faults that the BCPD would pass
- Larger horsepower motors can be grouped with smaller ones

Group Installation under 430-53(c) requires that the BCPD be calculated and either supplied within the control panel or, if mounted externally, the BCPD value must be specified by a label within the panel. Always refer to the NEC code before applying the KT7, KTA3 or KT4 in Group Motor Installations.

As stated earlier, Group Installations have been popular applications for KT7, KTA3 and KT4 Motor Circuit Controllers in North America. They greatly reduce cost when compared to using fuses or circuit breakers in each motor branch circuit.

Motor Disconnecting Applications - UL/CSA

The KT7 Motor Circuit Controllers are also UL/CSA listed as manual motor controllers with the optional approval "Suitable for use as a motor disconnect." This UL Listing (UL508, Part III) allows KT7s to meet the requirements for applications as "at-motor" disconnects. All manual starters used in such applications must be marked as "Suitable for use as a motor disconnect". The KT7 can be used in an enclosure with a lockable handle as a manual motor starter and is an approved means of motor disconnect.

Under the provisions of UL508 Part III, a Manual Motor Controller can be labeled "Suitable for use as motor disconnect" and does not require compliance with UL 98 Disconnect Rules. The primary difference between UL98 and UL 508 Part III is that the Manual Motor Controller must bear a maximum KAIC rating. This rating must be considered in the application of KT7 as a motor disconnect.

Corresponding to this section of UL, the NEC code Article 430-109 a1b6 [CEC 28-602 (3)(b)] permits the use of a manual motor controller when installed between the BCPD and the motor.

Self-Protected Manual Combination Starter Applications (Type E) - UL/CSA

Type E Controllers were recognized by UL in 1990. UL508, Part IV, Sections A–E (17th Edition) cover combination motor controllers that also provide a disconnecting means, a controller (load switching means), and overload and short-circuit protection, all incorporated within the same device or assembly. Under these provisions, the KT7 Self-Protected Motor Circuit Controllers, with improved current limiting and breaking capacity (KAIC rating), are now UL/CSA Listed as Construction Type E manual combination motor controllers. This Type E rating eliminates the need for individual branch fuses (per UL 198) or a thermal-magnetic circuit breaker or magnetic-only circuit breaker (per UL 489) as the Branch Circuit Protection Device (BCPD). See Figure 4.

Methods of Applying KT7 Motor Circuit Controllers *(continued)*

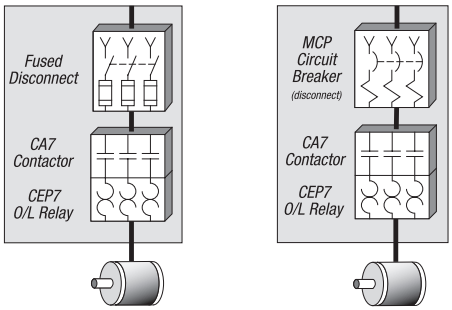

Figure 4
Classic Combo Starter (NEC Article 430-52)

Further, the Type E rating eliminates the need for an additional disconnecting means (per UL 98) for enclosed and dead-front switches, UL 1087 molded case switches, or UL 489 molded case circuit breakers.

Corresponding to this UL Type E rating, NEC code (Article 430-52 c6) now allows a self-protected combination controller to be used as the BCPD instead of the classic devices listed in Table 430-152 under NEC 430-52c1.

Simply stated this Type E listing allows the KT7 Self-Protected Combination Motor Controllers to be used as short-circuit protection, overload protection, and as the motor disconnect on motor branch circuits. See Figure 5.

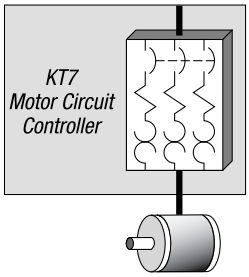

Figure 5
KT7 Manual Motor Controller and "At motor" Disconnect

It should be noted that the KT7 Manual Motor Circuit Controller, when listed as a self-protected (Type E) device, is rated for Wye-connected power systems for voltages 480Y / 277 volts common in the United States or 600Y/ 347 volts common in Canada.

Effective July 16, 2001 UL made changes to its specifications for self-protected Type E combination controllers. Among them is a required increase in space between line side terminals of a 2 inch creepage distance. This directly affected KT7 controllers in specific applications which is why we introduced the -TE1 adaptors. The adapter allowed the KT7 to comply with the new requirement for the incoming line.

KT7 controllers used as Branch Circuit Protection Devices (BCPDs) in Type E applications will be required to meet the new specifications. KT7 controllers applied as manual motor starters, or part of a group installation, are exempt from the new requirement.

- *All CL7, CK7, enclosed KT7 and CX7 starters assembled with KT7 controllers include the TE1 terminal adaptors.*

Individual Combination Starter Applications

The next logical step is to combine a CA7 contactor to the (Type E) self-protected manual combination KT7 controller. The KT7 starter provides the overload and short circuit protection, as well as, the disconnecting function for the motor, while the CA7 contactor allows for remote operation via push buttons. By contrast, the traditional fusible combination starter consists of a fusible disconnect switch, short-circuit protection (alternately an MCP or MCCB), a contactor for remote operation and a CEP7 overload relay (see Figure 4). The KT7 Type E manual controller + CA7 contactor combination can now be compared with a traditional fusible or circuit breaker Combination Starter including the means of disconnect.

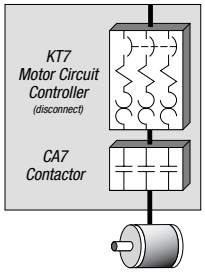

Figure 6
Type E Combo Motor Controller (starter) and "At motor" Disconnect (NEC Article 430-52 (c6)

Multi-motor Starter Combination Applications

The KT7 Construction Type E rating also eliminates concern for all of the NEC 430-53 [CEC 28-206] rules for installations involving multiple motor starters in a single control panel. The result is maximum flexibility and minimum panel size without the restrictive and cumbersome rules involved with typical multi-motor (Group Installation) applications.

This means that the main fuses or circuit breaker are no longer necessary to meet the requirement of a Group Installation Branch with Taps.

Methods of Applying KT7 Motor Circuit Controllers *(continued)*

Branch Circuit Protection Device (BCPD)

A non-fused disconnect may be needed to meet the safety disconnect rules for the multi-motor starter control panel. It is important to separate the code requirements for BCPD's from the safety codes requiring a panel disconnect to be "in sight and within 50 feet" to protect the maintenance electrician. KT7s perform the function of BCPD's under the Type E combination motor controller approval and may simply be selected according to the motor full-load current with consideration for the potential fault-current.

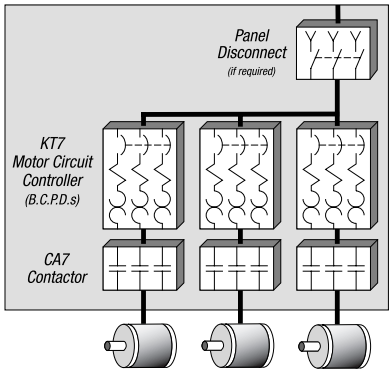

Figure 7
Multi-motor Starter Panel using KT7 as Type E Combo Starter (BCPDs) per NEC Article 430-52 (c6)

Short-circuit Coordination

UL508 sets safety standards for industrial control equipment. UL standards for starters provide protection against fire or personal injury under fault conditions. Passing a UL short-circuit test means the current carrying parts may not move, which does not imply the device won't be damaged or that the device will be reusable following the fault.

The concept of Type 1 and Type 2 coordination are European based but are certainly not new to the North American market. Fuse companies have been at the forefront of advancing the concepts and advantages of Type 2 protection. An appreciation for the advancements offered by self-protected combination motor controllers like KT7 must start with a firm understanding of standards Type 1 and Type 2 protection versus Construction Type E.

Type 1

- Under short-circuit conditions, the contactor or starter shall cause no danger to persons or installation.
- Damage to the contactor and the overload relay is acceptable.
- It may not be suitable for further service without repair and replacement of parts.

A UL listing of a device or combination of devices like a contactor and an overload relay would be equivalent to Type 1 coordination in European (IEC) terminology.

Type 2

- Under short-circuit conditions, the contactor or starter shall cause no danger to persons or installation and shall be suitable for further use.
- The risk of contact welding is recognized, in which case the manufacturer shall indicate the measures to be taken in regards to maintenance of the equipment.

Most of the above is European terminology that has worked its way into North American terminology.

Type E

Construction Type E Self-protected Combination Motor Controllers

- Do not require branch circuit short circuit protective device (fuse or circuit breaker) upstream
- Includes coordinated overload and short circuit protection
- No welding of contacts is allowed
- Incorporates a motor disconnect rating
- Includes an endurance standard after interrupting a short-circuit exceeding that specified for Type 2.

This means the test for self-protected combination controllers is more stringent than Type 2; therefore, many people refer to Type E with implication not only to the construction type as defined under UL508 and applied in accordance with NEC 430-52C Option 6 but also to the type of coordinated short-circuit protection achieved. More on Type E testing later in this text.

Short-circuit coordination is about the level of damage allowed to the control equipment under a short circuit condition and the speed of operation is the key to current limitation.

Methods of Applying KT7 Motor Circuit Controllers *(continued)*

Suitability for Tap Conductor Protection

For several years, the industry has been applying manual motor circuit controllers in Group Installations under NEC 430-53C. Many of you have been aware of the vagueness of the current NEC with respect to NEC 430-53D concerning "Single Motor Taps." The 2002 NEC added a new provision which clarifies the sizing of wires in a Group Installation where the wires feeding each motor circuit controller is considered to be a tap conductor.

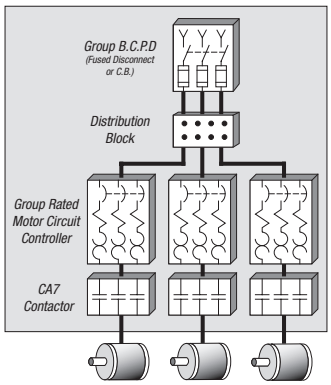

Figure 8
Article 430-53C Circuitry With Group Rated Controller

NEC-430-53-D-1 restricts the wire feeding the motor circuit controller to be equal to the wire connected to the BCPD which is extremely limiting. NEC-430-53-D-2 allows reduction of the sizing of the wire leading to the BCPD to not less than 1/3 of the wire connected to the BCPD. Since most 25 ampere frame motor circuit controllers only allow for #10 wire maximum (which is rated for 40 amperes) per UL508A "Internal Wiring Standard"; it follows that the BCPD must be limited to 120 amperes maximum. Note that the actual FLA connected is limited to 80% of the wire rating. So, applications under NEC 430-53C are directly linked to compliance with NEC 430-53D, with respect to wire sizing on the tap conductors.

The 2002 NEC has provisions for Single Motor Taps under Section 430-53D-3, which clearly provides for sizing motor circuit controller wires at 1/10 if the length does not exceed 10 feet. This means most 25 ampere frame motor circuit controllers that only allow for #10 wire maximum might be as large as 400 amperes (80% rating must apply). Further that 45 ampere frame motor circuit controllers that allow for #4 wire maximum (which is rated for 105 amperes) might be as large as 1050 amperes (80% rating must apply). It should be noted that mini-bus bars, often used to inter-connect the line side of motor circuit controllers, may increase the capacity of the allowable wire size.

This change in the 2002 NEC does require some additional testing of the motor circuit controller under UL508 in order to mark the device "Suitable for Tap Conductor Protection in a Group Installation." The testing associated with single motor taps is nearly as difficult as those associated with the test for Self-protected Combination Motor Controllers (described elsewhere in this white paper). This means that the Tap Conductor Protection ratings may well align with the ratings for Self-protected Combination Motor Controllers.

It is the opinion of this writer that the strict enforcement of the wire sizing options defined by NEC 430-53D-1, -2, or -3 will force the industry to apply Self-protected Combination Motor Controllers (Construction Type E or Type F) in multiple motor starter panels under the provisions of NEC 430-52-C- 6 as opposed to applying simple Group Rated Manual Motor Circuit Controllers under Group Installations as defined under NEC 430-53-C.

The most common error on the part of users is to assume that a group rated manual motor controller can be used under the same rule as a self-protected combination motor controller. The two assemblies may look similar but the rules of application are entirely different.

Assemblies Using KT7

Since devices like KTA7 do not include a magnetic coil contactor in the assembly, they are considered to be manual motor controllers. If you are building a multi-motor starter panel you probably need to provide for remote control and so you add a contactor to the assembly. Sprecher + Schuh has combined the KT7 Self-protected Combination Controller (Construction Type E) into assemblies with appropriately sized contactors. These assemblies are available in three varieties:

- CL8 = KT7 + Connector + CA8 Mini-contactor
- CL7 = KT7 + Connector + CA7 Contactor
- CK7 = KT7 + CA7 mounted on a DIN adapter socket with terminal blocks

CL8 and CL7 use connectors (i.e: PEK, PEC or PNC type) to mate the KT7 with CA8 and CA7 contactors. Sprecher+Schuh has cUL Approval of our -PEK, -PEC, and -PNC connectors. This means CL8, CL7, and CK7 assemblies have a KAIC rating and are shown on the UL website for SCCR.

Methods of Applying KT7 Motor Circuit Controllers *(continued)*

Type E Self-protected Combination Motor Controller Assemblies

An assembly of a Construction Type E KT7 Manual Controller plus a contactor can be tested as a Self-protected Combination Controller. This means the assembly must meet all of the same rigid standards including Type E coordination as described above. Sprecher + Schuh provides additional tables showing the KAIC ratings of CK7 starters approved by UL as Type E assemblies, as well as the CL8 & CL7 ratings that are UL approved for Type E or F respectively.

Type F Combination Motor Controllers

Manufacturers of Construction Type E controllers have worked closely with UL concerning the addition of a Construction Type F Combination Motor Controller to their specifications and test procedures. UL added Type F to UL508 Part III Section 76. In 2002, Construction Type F was defined as a Type E Manual Self-protected Combination Controller combined with a magnetic contactor but allowing damage to the contactor under a short circuit. The damage allowed to the contactor is similar to that allowed to Construction Type A, B, C or D Combination Starters combined with a standard contactor and overload relay better known as the classic Combo Starters.

	Construction Type	Description
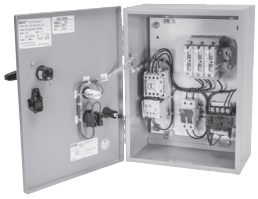	A	Fusible Combination Starter
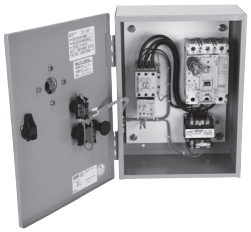	B	Short-Circuit Protected Combination Starter
	C	Thermal-Magnetic MCCB Combination Starter
	D	MCP (Magnetic Only) Circuit Breaker Protected Combination Starter
	E	Self-Protected Combination Starter (KTA7) May include KTA7 + CA7 Contactor if the assembly can pass the life endurance test after short-circuit
	F	Combination Starter PLUS Magnetic Starter (KTA7 + CA7)

A Combination starter (Type A Fusible, or Type B, C or D Circuit Breaker versions) must pass a short-circuit performance test specified by UL508 Table 77.4. Passing a basic short-circuit test means current carrying parts may not move, and there is no requirement for an endurance test following the short-circuit.

Type E Self-Protected Combination starters must not only pass the basic UL short-circuit test, but also pass an endurance test as outlined in UL508 Table 83.1. The test sequence includes make and break two times FLA current, 1000 times at a speed of 1/2 second on and 1/2 second off. The second part of the sequence includes 5000 operations with FLA at a speed of 1 second on and 9 seconds off. The third sequence of these tests requires 4000 operations at no load. No failures are allowed, and that includes no contact welding.

To build a Type F Combination starter you begin with a UL Approved Type E Manual Self-protected Motor controller and add a contactor in an assembly. The assembly is then tested to the same standards you would for a Classic Type A thru D Combination starter (Coordination Type I).

Note that the Type F designation 'Combination Motor Controller' is missing the term 'Self-protected' which is reserved for an assembly that is fully Type E Approved as described above. This means that Type E assemblies are superior to Type F assemblies with respect to coordinated protection. Both Type F and Type E are valid selections for customers to make an informed price versus performance choice.

Once again, if the customer wants Type 2 protection, the manufacturer must back their recommendations with self-certify testing. Sprecher + Schuh provides additional tables for the customer to select Type 2 KAIC ratings for Type F Combination Motor Controllers in the technical data section of this chapter. It might be said that Construction Type F Coordination Type 2 ratings are very close to those of Type E. It is important to note that the difference is that Type E provides the assurance of an endurance standard after interrupting a short-circuit exceeding that specified for Type 2.

In short, you could say that Type F1 is good, Type F2 is better and Type E is the best.

Methods of Applying KT7 Motor Circuit Controllers *(continued)*

Three Component Starters

We have discussed how a Type E self-protected combination motor controller can be combined with a contactor to be a Type F assembly to meet the requirements of UL508. Further, we have discussed how a self-protected combination motor controller can be combined with a contactor and tested as an assembly to the more stringent Type E standard, resulting in life after a short-circuit for the assembly. We have outlined how our KTA7 is designed for use with standard Design B squirrel cage motors with 6X FLA = LRA start-up current by using a magnetic trip mechanism set for 11-13 X FLA trigger point. We also outlined how our KTC7 is designed for high efficiency Design B or Design E motors with 9X FLA =LRA or higher start-up current by using a magnetic mechanism set for 17-20 X FLA trigger point. Now let's turn our attention to the KTB7 which is a magnetic only device and has no thermal or bimetal overload mechanism.

By definition a Type E/F combination motor controller must provide the following functions:

- Short-circuit protection
- Motor Disconnect
- Controller (Manual unless combined with a contactor)
- Thermal overload protection

This means that a magnetic only motor circuit controller (KTB7) alone can not be a Type E device and if it can not be a Type E device then by definition KTB7 can not simply be combined with a contactor to be a Type F device to protect motors. However, a magnetic only motor circuit controller (KTB7) might be combined with a contactor and a separate overload relay and tested to Type E standards as an assembly. NEC 430-52 C Option 7 states that a magnetic only (instantaneous only) short-circuit protector will be permitted when part of a UL Listed combination motor controller has coordinated motor overload protection and short-circuit in each conductor.

Considering that most applications are well covered with the application of KTA7 or KTC7 Type E or Type F assemblies then one might ask what kind of application would require the 3- component combination of a magnetic only motor circuit controller, a contactor and a separate overload relay. The answer is that some customers have applications that require additional functionality not available with our self-protected combination controllers (KTA7 or KTC7).

These applications might include:

- Multiple motor starter panel requiring individual overload resets
- Class 15, 20 or 30 overload protection rather than Class 10
- Remote control of overload relay reset
- Motor Stall protection
- Ground Fault protection
- PTC thermistor relay functions
- Overload relay communications (Ethernet or Profibus)

Our CEP7 solid state relay can be combined with side-mount protection modules to provide additional protection as specified by the customer for unique applications. The Sprecher + Schuh version of these 3 – component assemblies are called CLT7. Put simply, a CLT7 is another version of a Type E device with additional overload relay features not commonly provide in standard versions.

A Note About Mini-Circuit Breakers

All too often we see UL1077 DIN rail mounted Mini-circuit breakers applied as branch circuit short-circuit protection ahead of a standard contactor and overload relay. UL1077 Supplemental Circuit Breakers were never intended to replace UL489 Approved Circuit Breakers as short-circuit protection for a motor branch circuit. Some customers might be employing UL1077 circuit breakers to "protect" motor circuits. This product is not approved for this purpose, nor is it in compliance with NEC 430-52.

Sprecher + Schuh sells UL1077 Mini-circuit breakers as well as KT7 Motor Circuit controllers, and it is our desire to help customers apply each in accordance with applicable codes and standards. Please reference our technical application notes in Section M for the proper application of UL1077 Mini-CBs.

There are UL489 Approved Mini-CBs in the marketplace that can be applied on 240 volt and others approved for 480Y/277V motor applications in accordance with UL and NEC. Note that these 240 volt UL489 rated circuit breakers are often seen improperly applied to 480 volt applications. This DOES NOT comply with UL and NEC. KTA7 Motor Circuit Controllers can be applied as motor protection in applications up to 480Y/277 or 600Y/347 volts. There are 480Y/277 volt mini-CB but applying them to motors has additional issues not discussed here.

It should be noted that UL489 Mini-CB's do not comply with UL508 as an overload relay. Therefore anyone applying a UL489 Mini-CB as short-circuit protection must also add a true overload relay to each motor circuit.

Neither UL1077 or UL489 Mini-CBs have the ability to interrupt a high ampere short-circuit with the speed of a KT7 Motor Circuit Controller, nor do they have the KAIC withstand rating, the ability to provide Type 2 coordination and certainly not Construction Type E/F approvals or the same level of equipment protection.

Finally, since KAIC rating of the short-circuit and contactor are required by UL, then SCCR rating must be limited to the 5KA maximum level since these mini circuit breakers have not been tested with the contactor and overload relay as required. For additional information concerning the proper application of UL1077 or UL489 Mini-CB's, please refer to our White Paper located in Section M of the Sprecher + Schuh catalog.

Methods of Applying KT7 Motor Circuit Controllers *(continued)*

Methods of Applying KTU7 Molded Case Circuit Breakers

The KTU7 is a UL489 Molded Case Circuit Breaker that provides thermal-magnetic protection for non-motor loads. The KTA7 and KTC7 as discussed in the previous pages can be applied in one of two ways:

- Manual Motor Controller often used in Group Installation per NEC 430-53.C
- Self-Protected Combination Motor Controller (Type E) multiple motor starter applications per NEC 430-52.C.6

A KTA7 applied as a Manual Motor Controller in a Group Installation per NEC 430-53C can be applied to non-motor loads; however, as we have related in the previous pages, Group Installation rules are in declining use. The use of Type E/F rules are taking the lead in applications involving three or more motor starters. Self-protected Combination Motor Controllers are, as the name suggests, for use on motor loads. In multi-motor starter panels there are often other non-motor loads that also require a Branch Circuit Protection Device (BCPD). The purpose of this section of the white paper is to address methods of applying the protecting non-motor loads. Non-motor loads include control circuit transformers, power transformers (1KVA or greater), heaters, blowers, receptacles for portable equipment, refrigeration equipment, and small panels used for power distribution to smaller machines.

In 2011, Sprecher + Schuh conducted a survey of multi-motor starter panel builders. From that survey we determined the common installation practices when assembling a custom control panel involving three or more motor starters and protection methods for non-motor loads. We found that many users prefer a fuse-less system, but our survey indicates fuses are still used by many to protect non-motor loads. Those who use fuses are utilizing Class CC and J-Type fuse blocks and fuses as short-circuit protection of non-motor loads. It is clear that most customers have switched away from RK1 and RK5 fuses in favor of the faster acting Class CC and J-Type fuses because they limit let-through. Failing to limit let-through current allows damage to downstream equipment. We might assume that fuses are still being utilized in part because of cost but also because fuse companies have historically touted that fuses are faster than molded-case circuit breakers. Further that fuses are current limiting and molded case circuit breakers are not current limiting.

These facts are true in comparison to 600 Volt class molded case circuit breakers, but 480Y/277 volt molded case circuit breakers (like KTU7) are different. During a fault condition the peak current (I_p) is reached in ¼ of a cycle (4 ms) which results in mechanical damage to electrical equipment. The I^2T (area under the curve) represents the heat damage produced by the fault. KTU7 (and KTA7, KTB7 and KTC7) operates in 2 ms (2/1000 second) (reference Section F of current Sprecher + Schuh catalog for time-current curves). Fault curves are parabolic which means the KT7 family of devices reduce the damaging fault curve to much less than one-half as shown in Figure 9.

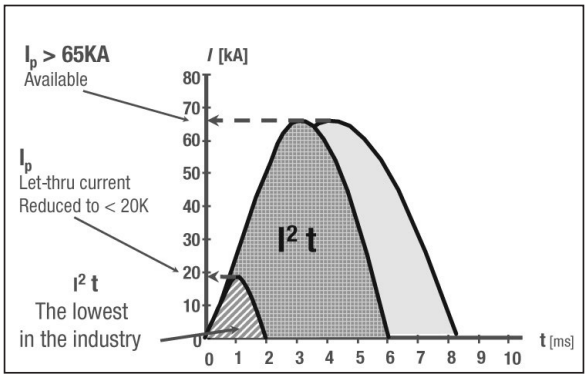

Figure 9 KTU7 Limits Let-through Current I and Let-through Energy I^2t

We found from our survey that a percentage of people are using UL1077 Supplemental Protectors for short-circuit protection of non-motor loads. UL1077 Supplemental Protectors are NOT approved for use as the Branch Circuit Short-circuit Protection Devices (BCPD) feeding space heaters, power transformer (1KVA or more), or receptacles. The rules for applying UL1077 circuit breakers as the primary of a control circuit transformer are very limiting and we believe that many may be applied in violation of NEC, CSA and UL standards. The term "Supplemental" is the key as these UL1077 Supplemental Protectors can be used to protect a load that is NOT required (supplemental) by code. i.e.: protect a PLC card from downstream short-circuit in the control circuit.

Many customers are currently using 480Y/277 volt UL489 Approved Mini-CB to protect non-motor loads; this application is in accordance with UL, NEC and CSA codes. Most UL489 Mini-CBs' are rated only 10 KA. A few UL 489 Mini-CB's in the market place are rated up to 14 KA. A UL489 Mini-Circuit Breaker (like L9) is the most cost effective method of providing a fuse-less system for protecting non-motor loads that is code compliant for 240V and 480Y/277 volt. The disadvantage of UL 489 Mini-CB is that since the SCCR rating of the assembled panel is based on the weakest link, then the 10 KA or 14 KA rating becomes the overall SCCR rating of the panel even if the Self-Protected Combination Motor Circuit Controller (KTA7 or KTC7) protecting the motor loads may be rated 65 KA.

KTA7 and KTC7 and similar competitive devices are not approved as a Type E device for short circuit protection of non-motor loads. Any of our customers using these Type E devices to protect non-motor loads are not in compliance with UL, NEC and CSA codes. The introduction of the UL489 Approved KTU7 Molded Case Circuit breaker provides an alternative for application on non-motor loads including control circuit transformer, power transformers (1 KVA or greater), heaters, blowers, receptacles for portable equipment, refrigeration equipment, and small panels used for power distribution to smaller machines.

The advantages of using a KTU7 Molded Case Circuit Breaker to protect non-motor loads in a multi-motor starter panel are:

- Independent thermal protection under overload condition and magnetic protection under short circuit condition.
- KTU7 distinguishes the difference between an overload and a short circuit, therefore simplifying trouble shooting a problem.
- Cost savings and 50% space savings in comparison to 600 Volt Class UL489 Molded Case Circuit Breaker

Methods of Applying KT7 Motor Circuit Controllers *(continued)*

- Space savings in comparison to a 480Y/277 Volt UL489 Mini-CB.
- UL489, CSA22.2 No.5 and IEC 9047-2 approval which means the KTU7 is a internationally approved circuit breaker good in North America and European CE applications.
- Available in 2-pole and 3-pole version and has a 100% rating up to 10 amperes and 80% rating (equal to other MCCB) from 16 to 30 amperes.
- KTU7 has a 100KA rating up to 10 amperes at 480Y/277V (50 KA at 600Y/347V) and 65 KA from 12 ampere to 30 amperes continuous at 480Y/277V (53KA at 600Y/3437V). When combined with KTA7, the SCCR rating for the entire assembly increases to as high as 65 KA at 480Y/277V (47 KA at 600Y/347V). *Please reference specific ratings for your application selection.*
- KTU7 is a current limiting device with a 2 ms trip time which reduces the downstream damage to contactors and other equipment during a short-circuit condition.
- KTU7's not only look similar to the rest of the KT7 family; they can also be connected on the line side with compact bus bars and a feeder supply block resulting in a compact, labor saving, and clean panel design similar to what is available for KTA7.
- Pre-formed connectors for KTU7 to CA7 contactors provide a uniform look to similarly connected KTA7 to CA7 units in a multi-motor starter panel.
- KTU7 can have (2) field installed standard auxiliary contacts or trip indicating auxiliary contacts. Compatible under-voltage and shunt-trip side mount modules will also be available.

We believe the above list represents some significant advantages over previous methods of protecting non-motor loads in a multi-motor starter panel.

Summary

In summary, a KT7 can be applied as a Manual Motor Controller, Group Installation Overload Relay or a Manual Self-Protected Combination Motor Controller (Type E). CL7, CLT7 and CK7 can be applied as a Self-Protected Combination Motor Controller assembly (Type E or F) based on selection. In addition to the above, the CL8 can be applied as a Combination Motor Controller (Type F).

Fuses or circuit breaker are no longer necessary to meet the requirement of a Group Installation BCPD for motor loads. A label within the panel specifying the BCPD outside the panel is a thing of the past. Multi-motor starter panels using the KT7 verses Sprecher + Schuh's previous Motor Circuit Controller (KTA3) probably won't look much different. The real difference is the NEC rules applied to accomplish the task, along with an increased level of KAIC Type 2 protection against the possibility of a short-circuit fault.

KTU7 UL489 approved Molded Case Circuit breakers offer an alternative to fuses or UL489 Mini-Circuit breakers to protect non-motor loads, resulting in higher SCCR ratings on multi-motor starter panels.

Applying these state-of-the-art controllers properly in North America requires a working knowledge of UL, CSA, and NEC. It is our objective to assist customers in keeping pace with developments that can impact the cost effective protection of their control systems, reduce downtime, and increase production for their customers. We encourage customers to contact their local Sprecher + Schuh representative or the factory to discuss issues about application of these devices.

This white paper is only a guide. Be sure to consider all applicable local and national codes for your particular installation.

KT4 Manual Motor Starter

Ideal for use as a manual starter

The KT4 is a manual motor starter that employs the features of power switching, thermal overload protection and control circuit signaling in one compact unit. This manual motor starter has the advantage of a high speed magnetic trip mechanism which limits the let-through current under short-circuit conditions. The KT4 can be supplied with field installable shunt trip or an under voltage trip unit which exceeds the capabilities of the classic manual motor starter. This manual motor starter is available in a variety of enclosures including general purpose, watertight and explosion proof (the most compact on the market today).

KT4 Reduces panel space and saves money in Group Motor Installations

The KT4 can eliminate the need for larger and more expensive fuse blocks and fused disconnects, or circuit breakers. The potential cost savings in group motor installations according NEC 430-53c can be as much as 35% over conventional methods of branch circuit protection. And, because so many features are combined into one small unit, panel space can be slashed by as much as 60%.

In addition, the KT4 line offers a wide application range from 0.1 to 16 FLA in installations up to 600V. For group motor applications, the KT4 series has a 250A group installation rating, with a withstand rating as high as 42 KAIC.

Excellent short circuit and thermal overload protection

In the event of a short-circuit, the contacts are opened by magnetic, non-adjusting tripping elements in times approaching 2/1000 of a second. This results in the extremely rapid build-up of an arc voltage which limits the current of the short-circuit to a very low level. Because of this superb current limiting capability the let-through current is significantly reduced and the potential for damage is limited.

Because each KT4 is individually calibrated at the factory for the smallest and largest current, very accurate thermal overload protection is also obtained. In addition, the KT4 is a Class 10 device ... it trips within 10 seconds under a locked rotor condition (6 x FLA). Every KT4 Manual Motor Starter is equipped with automatic ambient temperature compensation, which continually adjusts to surrounding temperatures. As a result, trip times remain constant and accurate.

Accessories add versatility

Whether in group motor installations or as a manual motor starter, numerous field installable accessories are available to enhance the KT4's performance:

- **Auxiliary Contact Blocks** – are available for internal or external mounting providing signal switching capability for control circuits.
- **Shunt trip and Undervoltage Release Modules** – provides the ability to remotely actuate the KT4 in emergency situations or continuously monitor the line voltage.
- **Enclosures** – are available in general protection (IP41), or watertight (IP55), complete with lockable accessories.
- **Compact Bus Bar System** – reduces the task of line side wiring in multiple motor starter installations which reduces the labor cost of installation.

KT4 Manual Motor Starter ❶

Maximum Horsepower ❶❷						O/L Relay Ampere Response ❹	Magnetic Response Current	Ordering Information ❶	
Single Ø ❷		Three Ø							
115V	230V	200V	230V	460V	575V			Catalog Number	Price
~	~	~	~	~	~	0.1 - 0.16	1.8	**KT4-C2A-A16**	**210**
~	~	~	~	~	~	0.16 - 0.25	2.8	**KT4-C2A-A25**	**210**
~	~	~	~	~	~	0.25 - 0.4	4.4	**KT4-C2A-A40**	**210**
~	~	~	~	~	~	0.4 - 0.63	6.9	**KT4-C2A-A63**	**240**
~	~	~	~	~	1/2	0.63 - 1.0	11	**KT4-C2A-B10**	**240**
~	1/10	~	~	1/2	3/4	1.0 - 1.6	18	**KT4-C2A-B16**	**240**
1/10	1/6	1/2	1/2	1	1-1/2	1.6 - 2.5	28	**KT4-C2A-B25**	**240**
1/8	1/3	3/4	3/4	2	3	2.5 - 4.0	44	**KT4-C2A-B40**	**240**
1/4	1/2	1	1-1/2	3	5	4.0 - 6.3	69	**KT4-C2A-B63**	**240**
1/2	1-1/2	2	3	5	7-1/2	6.3 - 10	110	**KT4-C2A-C10**	**240**
1	2	3	5	10	10	10 - 16	176	**KT4-C2A-C16**	**275**

Short Circuit Ratings ❸

Catalog Number	Manual Motor Starter / Group Installation Ratings		
	Short Circuit Rating (kA)		Maximum Branch Circuit Protection Rating ❺
	480V	600V	Amperes
KT4-C2A-A16	42	42	250
KT4-C2A-A25	42	42	250
KT4-C2A-A40	42	42	250
KT4-C2A-A63	42	42	250
KT4-C2A-B10	42	42	250
KT4-C2A-B16	42	42	250
KT4-C2A-B25	42	10	250
KT4-C2A-B40	18	5	250
KT4-C2A-B63	18	5	250
KT4-C2A-C10	10	5	250
KT4-C2A-C16	10	5	250

❶ Horsepower ratings shown are the maximum rating of the switching capacity of the main contactors. **The final selection of the manual starter depends on the actual motor full load amps and service factor.**

Example #1:
For a motor with a service factor of 1.15 or greater, use the motor nameplate full load amps and choose the motor starter with the appropriate current range.

Motor F.L.A.	4.2A
Service Factor	1.15

Select catalog number KT4-C2A-A63 (Range 4.0-6.3 Amps)

Example #2:
For a motor with a service factor less than 1.15, use the motor nameplate full load amps times 0.9 and choose the motor starter with the appropriate current range.

Motor F.L.A.		4.2A
Service Factor		1.0
Multiplier	x	0.9
Effective Current	=	3.78A

Select catalog number KT4-C2A-A40 (Range 2.5-4.0 Amps)

❷ Single phase horsepower ratings are based on wiring the 3 poles of the device in series.

❸ The KT4 motor circuit controller is approved for use in group installation according to NEC 430-53C. Reference Sprecher+Schuh UL file #E54612.

❹ The actual trip current is 120% of the dial setting.

❺ Although UL Testing of Manual Motor Starters allows for Group Installation with upstream Branch Circuit Protection maximum ratings as high as 250 amperes; it should be noted that NEC 2002 contains new restrictions under NEC 430-53D "Single Motor Taps". KT4 should be applied as outlined in NEC 430-53D-1 or 430-53-D-2 to be in compliance. KT4 does not qualify as "Tap Conductor Protection" as required under NEC 430-53-D-3. Please refer to the Application notes located at the end of the KT7 section for more details on compliance.

Accessories for KT4

Accessory	Description	Wiring Diagram	Catalog Number	Price
	Auxiliary Contact Block (NO) - mounts internally.		**KT4-C-AEA10**	**24**
	Auxiliary Contact Block (NO) - mounts internally, terminal markings appropriate when also using "PA" type auxiliary contact.		**KT4-C-AEA210**	**24**
	Auxiliary Contact Block (NC) - mounts internally.		**KT4-C-AEA01**	**24**
	Auxiliary Contact Block (NC) - mounts internally, terminal markings appropriate when also using "PA" type auxiliary contact.		**KT4-C-AEA201**	**24**
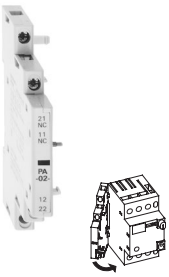	**Two pole Auxiliary Contact Block (NO/NC)** - for side mounting. If using Compact Bus Bar System, choose bus bar with 54mm spacing		**KT4-C-ASA11**	**45**
	Two pole Auxiliary Contact Block - (NO/NO) - for side mounting. If using Compact Bus Bar System, choose bus bar with 54mm spacing.		**KT4-C-ASA20**	**45**
	Two pole Auxiliary Contact Block - (NC/NC) - for side mounting. If using Compact Bus Bar System, choose bus bar with 54mm spacing.		**KT4-C-ASA02**	**45**

Accessory	Description	Catalog Number	Price
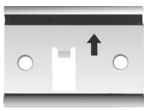	**Adaptor Plate** Provides capability to base mount one KT4	**KT4-C-N12**	**19**
	Locking Fixture Padlocking attachment for one KT4-25. Locks in the OFF position only. Metal construction. Holds one to three padlocks with 6mm hasps.	**KT4-C-M3**	**19**

Accessories for KT4 continued on next page ➟

Accessories for KT4 *(continued from previous page)*

Accessory	Description	Wiring Diagram	AC Coil Voltage 50 HZ	AC Coil Voltage 60 HZ	Catalog Number	Price
	Undervoltage Release Module - mounts on right hand side, Prevents KT4 from operating unless voltage is present.	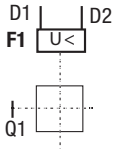	24V	~	**KT4-C-UXK**	**105**
			~	24V	**KT4-C-UXJ**	
			~	48V	**KT4-C-UXX**	
			110V	110V	**KT4-C-UXKD**	
			110V	**120V**	**KT4-C-UXD**	
			220…230V	~	**KT4-C-UXF**	
			~	240…260V	**KT4-C-UXA**	
			240V	277V	**KT4-C-UXT**	
			400V	460V	**KT4-C-UXN**	
			415V	**480V**	**KT4-C-UXB**	
			500V	575V	**KT4-C-UXM**	
	Shunt Release Module - mounts on right hand side. Remotely trips the KT4 .	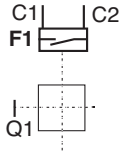	24V	~	**KT4-C-SXK**	**105**
			~	24V	**KT4-C-SXJ**	
			~	48V	**KT4-C-SXX**	
			110V	110V	**KT4-C-SXKD**	
			110V	120V	**KT4-C-SXD**	
			220…230V	~	**KT4-C-SXF**	
			~	240…260V	**KT4-C-SXA**	
			240V	277V	**KT4-C-SXT**	
			400V	460V	**KT4-C-SXN**	
			415V	480V	**KT4-C-SXB**	
			500V	575V	**KT4-C-SXM**	

Accessory	Description	Voltage / Rated Current	Catalog Number	Price
	Connecting Module ❶- Provides a solid "wireless" connection between a KT4 Motor Circuit Controller and a CA7 contactor. Connects CA7-9…23	20A	**KT4-C-PNC23** (replaced KT3-NW23)	**20**

Accessories for KT4 continued on next page ➞

❶ cULus Approved (File E33916).

Accessories for KT4 *(continued from previous page)*

Accessory	Description	Enclosure Rating	Catalog No. ❶	Price
KT4-C-EA55	**Enclosures for Surface Mounting** - Includes ground and neutral terminals.	General Purpose (IP41)	**KT4-C-EA41**	**79**
		Watertight (IP55)	**KT4-C-EA55**	**141**
KT4-C-EE55	**Enclosure for Flush Mounting** - includes protective earth and neutral wire terminals.	General Purpose (IP41)	**KT4-C-EE41**	**45**
		Watertight (IP55)	**KT4-C-EE55**	**55**
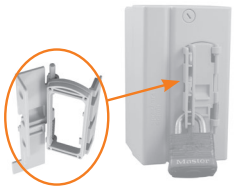	**Enclosure Locking Fixture** - Holds one to three padlocks with 6mm hasps.	For use with KT4-C-EA41 and KT4-C-EA55 enclosures	**KT4-C-M3E**	**18.50**
	Enclosure Membrane - Replacement membrane. Includes 4 mounting screws (membrane only, does not include mounting frame).	For replacement on KT4-C-EA55 or -EE55 or to upgrade KT4-C-EA41 or -EE41 enclosures	**KT4-C-N55**	**8.50**

Accessory	Description	Kit Catalog No.	Kit Price	For Use With	Assembled Cat No. ❶	Price
KT4-C-MT-EA55	**Emergency Stop Kit Twist-To-Release**	**KT4-C-MT**	**50**	KT4-C-EA41	**KT4-C-MT-EA41**	**142**
				KT4-C-EE41	**KT4-C-MT-EE41**	**109**
				KT4-C-EA55	**KT4-C-MT-EA55**	**209**
				KT4-C-EE55	**KT4-C-MT-EE55**	**117**
KT4-C-MK-EA55	**Emergency Stop Kit Key Release**	**KT4-C-MK**	**80**	KT4-C-EA41	**KT4-C-MK-EA41**	**173**
				KT4-C-EE41	**KT4-C-MK-EE41**	**139**
				KT4-C-EA55	**KT4-C-MK-EA55**	**240**
				KT4-C-EE55	**KT4-C-MK-EE55**	**148**

❶ KT4 Manual Motor Starter Not Included. Consult a Sprecher + Schuh representative for an assembly including a KT4.

Compact Bus Bar System for KT4

Accessory	Description	Catalog Number	Price
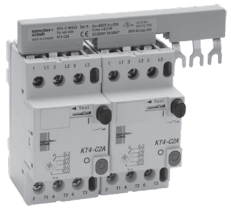	**Compact Bus Bar - 45mm spacing** - Bus bar with 45mm spacing accepts KT4's with *or without* internally mounted auxiliary or trip signal contact. Rated to 65A (UL)/63A (IEC).		
	Connects two KT4's	**KT4-C-W452**	**43**
	Connects three KT4's	**KT4-C-W453**	**50**
	Connects four KT4's	**KT4-C-W454**	**56**
	Connects five KT4's	**KT4-C-W455**	**62**
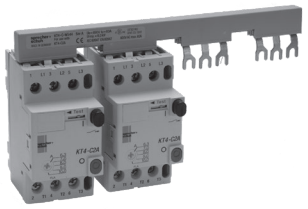	**Compact Bus Bar - 54mm spacing** - Bus bar with 54mm spacing accepts KT4's with side mounted auxiliary contact (type PA-11). Rated to 65A (UL)/63A (IEC).		
	Connects two KT4's	**KT4-C-W542**	**43**
	Connects three KT4's	**KT4-C-W543**	**50**
	Connects four KT4's	**KT4-C-W544**	**56**
	Connects five KT4's	**KT4-C-W545**	**62**
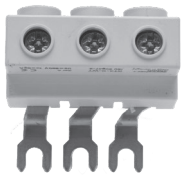	**Supply Block** - Provides connection from bus bar to power.	**KT4-C-WT**	**40**
	Blank Space Cover - Covers bus bar connections where no KT4 is mounted.	**KT4-C-WS**	**6**

Technical Information

		KT4…
Standards Approvals		UL 508; CSA22.2; EN/IEC 60947-1/-2/-4/-5-1/
		UL, CSA, CE, SEV, Germ. Lloyd, CEBEC, PTB, DEMKO, SEMKO, SETI, NEMKO, Bureau Veritas, Lloyd's Register of Shipping, Maritime Register of Shipping, RINA, KEMA
Approvals / Markings		CE, cULus Listed
Rated Insulation Voltage		
IEC, SEV, VDE0660	[V]	690
UL, CSA	[V]	600
Rated Impulse Withstand Voltage		
Main circuits		6 kV
Auxiliary circuits		6 kV
Rated Frequency	[Hz]	40…60
Rated Operating Current	[A]	0.1…16 (11 ranges)
Life		
Mechanical	[operations]	100,000
Electrical	[operations]	50,000
Switching Frequency		Max. 30 operating cycles/hour
Ambient Temperature		
Storage		-25°C to +80°C
Operation		-25°C to +60°C
Resistance to climatic change		
Humid heat		40°C, 92%, 56 days
Alternating climatic conditions		23°C, 83%/40°C, 93%, 56 cycles
Degree of Protection		IP20 (when wired)
Impact Resistance (shock)		50g, 11ms
Vibration Strength		
Frequency Range		10…150Hz
In all directions		>7.5g
Overload Protection		
Tripping Time		Class 10
Phase failure protection		See time/current curve
Temperature Compensation		-20°C… +60°C (70°C=15% current reduction of upper rated current)
Magnetic Response		11 x *Ie* max. (fixed setting) (*Ie* max. = max value of the setting range)
Total Power dissipation		
Manual motor starter at rated load	[W]	7
Terminal Connections		
Type of terminals		
Screwdriver		Position No. 2/Blade No. 3
	1. conductor	1 to 4 mm² / 16 to 12 AWG
	2. conductor	1 to 4 mm² / 16 to 12 AWG
	1. conductor	1 to 6 mm² / 16 to 12 AWG
	2. conductor	1 to 6 mm² / 16 to 12 AWG
	1. conductor	1.5 to 6 mm² / 16 to 12 AWG
	2. conductor	1.5 to 6 mm² / 16 to 12 AWG
Tightening torque		2 to 2.5 Nm / 18 to 22 fb-in

Mounting Position - KT4

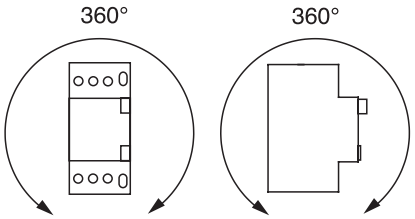

Weights

Description	Catalog Number	Weight
Manual Motor Starter	KT4-C2A...	290 g
Auxiliary Contact Blocks for Flush Mounting	KT4-C-AEA	12 g
Auxiliary Contact Blocks for Left-side Mounting	KT4-C-ASA	35 g
Undervoltage Release	KT4-C-UX	104 g
Shunt Release	KT4-C-SX	100 g
Bus Bar Feeder Terminal	KT4-C-WT	36 g
Compact Bus Bar	KT4-C-W452	42 g
	KT4-C-W453	69 g
	KT4-C-W454	94 g
	KT4-C-W455	119 g
	KT4-C-W542	45 g
	KT4-C-W543	76 g
	KT4-C-W545	104 g
	KT4-C-W545	135 g
Blank Space Cover	KT4-C-WS	3.3 g
Emergency-Stop Push Button	KT4-C-MT	g
	KT4-C-MK	g
Enclosure for Surface Mounting	KT4-C-EA41	250 g
Enclosure for Flush Mounting	KT4-C-EA55	258 g
Button Membrane	KT4-C-EE41	126 g
	KT4-C-EE55	134 g
Indicator Light	KT4-L...	10 g
Hut (DIN) rail Adapter	KT4-C-N12	16 g
	KT4-C-M3E	19 g
Locking Arrangement	KT4-C-M3	11 g

Technical Information

Specifications of Accessories		KT4-C-AEA... Auxiliary Contact Block for Flush Mounting				KT4-C-ASA... Auxiliary Contact Block for Left-side Mounting			
Rated Thermal Current I_{th}									
at 40°C ambient temperature	[A]	6				10			
at 60°C ambient temperature	[A]	4				6			
Contact Class Coordination According to NEMA									
(UL/CSA Standards)	[AC]	B 600 Standard Pilot Duty				B 600 Standard Pilot Duty			
	[DC]	R 300 Light Pilot Duty				R 300 Light Pilot Duty			
Back-Up Fuses gG, gL	**[A]**	**16**				**16**			
Rated Supply current	[V]	230/240	400/415	500	690	230/240	400/415	500	690
AC-15	[A]	2	1	0.8	0.5	2	1	0.8	0.5
DC-13	[V]	24	48	110	220	24	48	110	220
	[A]	2	0.6	0.2	0.1	2	0.6	0.2	0.1
Terminal Parts									
Type of terminals									
Screwdriver		Pozidrive No. 2 / Blade No. 3							
1. conductor		0.75 to 2.5 mm2 / 18 to 14 AWG				0.75 to 2.5 mm2 / 18 to 14 AWG			
2. conductor		0.75 to 2.5 mm2 / 18 to 14 AWG				0.75 to 2.5 mm2 / 18 to 14 AWG			
1. conductor		0.75 to 4 mm2 / 18 to 14 AWG				0.75 to 4 mm2 / 18 to 14 AWG			
2. conductor		0.75 to 4 mm2 / 18 to 14 AWG				0.75 to 4 mm2 / 18 to 14 AWG			
1. conductor		0.75 to 4 mm2 / 18 to 14 AWG				0.75 to 4 mm2 / 18 to 14 AWG			
2. conductor		0.75 to 4 mm2 / 18 to 14 AWG				0.75 to 4 mm2 / 18 to 14 AWG			
Tightening torque		1 to 1.5 Nm / 9 to 13 fb-in				1 to 1.5 Nm / 9 to 13 fb-in			

		KT4-C-UX... Undervoltage Release Unit for Right-side Mounting	KT4-C-SX... Shunt Release for Right-side Mounting	KT4-C-WT Supply Block
Actuating Voltage				
Pull-in		0.8 to 1.1 x U_s	0.7 to 1.1 x U_s	
Drop-out		0.7 to 0.35 x U_s	~	
Rated Control Voltage	min.	12V 50 Hz, 14V 60 Hz	12V 50 Hz, 14V 60 Hz	
	max.	600V 50 Hz	600V 50 Hz	
On-Time		100 %	100%	
Coil Rating	Pull-in	8.5 VA, 6 W	8.5 VA, 6 W	
	Hold	3 VA, 1.2 W	3 VA, 1.2 W	
Terminal Parts				
Type of terminals				
Screwdriver		Pozidrive No. 2/Blade No. 3	Pozidrive No. 2/Blade No. 3	Pozidrive No. 2/Blade No. 3
1. conductor		0.75 to 2.5 mm² / 18 to 14 AWG	0.75 to 2.5 mm² / 18 to 14 AWG	4 to 16 mm² / 14 to 6 AWG
2. conductor		0.75 to 2.5 mm² / 18 to 14 AWG	0.75 to 2.5 mm² / 18 to 14 AWG	4 to 16 mm² / 14 to 6 AWG
1. conductor		0.75 to 4 mm² / 18 to 14 AWG	0.75 to 4 mm² / 18 to 14 AWG	4 to 16 mm² / 14 to 6 AWG
2. conductor		0.75 to 4 mm² / 18 to 14 AWG	0.75 to 4 mm² / 18 to 14 AWG	4 to 16 mm² / 14 to 6 AWG
1. conductor		0.75 to 4 mm² / 18 to 14 AWG	0.75 to 4 mm² / 18 to 14 AWG	4 to 16 mm² / 14 to 6 AWG
2. conductor		0.75 to 4 mm² / 18 to 14 AWG	0.75 to 4 mm² / 18 to 14 AWG	4 to 16 mm² / 14 to 6 AWG
Tightening torque		1 to 1.5 Nm / 9 to 13 fb-in	1 to 1.5 Nm / 9 to 13 fb-in	4 Nm / 36 fb-in

		KT4-C-W45... Compact Bus Bar	KT4-C-W54... Compact Bus Bar
Rated Insulation Voltage U_i	[V]	690	690
Rated Thermal Current I_{th}	[A}	63	63

		KT4-C-EA41 / -EE41 Enclosure	KT4-C-EA55 / -EE55 Enclosure	KT4-C-L... Indicator Light
IP Protection		IP41	IP55 (with seal and protective membrane)	IP54
Ambient Temperature	[°C]	- 25...+ 40	- 25...+ 40	~
Rated Operating Voltage	[V]	~	~	120, 240, 415, 480

IEC Performance Data (KT4-C2A)

		-A16	-A25	-A40	-A63	-B10	-B16	-B25	-B40	-B63	-C10	-C16
Switching of standard three phase motors												
AC-2, AC-3												
230/240V	[kW]	~	~	~	0.06/0.09	0.12	0.18/0.25	0.37	0.55/0.75	1.1/1.5	2.2	3.0/4.0
400/415V	[kW]	0.02	0.06	0.09	0.18/.25	0.25	0.37/0.55	.75	1.1/1.5	2.2	3.0/4.0	5.5/7.5
500V	[kW]	~	~	~	0.18	0.25/0.37	0.55/0.75	1.1	1.5/2.2	2.5/3.0	4.0/6.3	7.5/10
690V	[kW]	~	~	~	0.25	0.37/0.55	0.75/1.1	1.8	2.2/3.0	~	~	~
Back-up fuses												
gG, aM, only if *I*cc > *I*cu												
230/240V	[A]	No Fuses Required						~	~	~	~	50
400/415V	[A]							~	~	~	63	50
500V	[A]							~	~	63	50	50
690V	[A]							25	35	~	~	~
Ultimate short-circuit breaking capacity *I*cu												
230/240V	[kA]	65	65	65	65	65	65	50	50	50	50	3
400/415V	[kA]	65	65	65	65	65	65	50	10	10	8	6
500V	[kA]	50	50	50	50	50	50	50	3	10	4.5	4.5
690V	[kA]	50	50	50	50	50	50	4.5	2	~	~	~

CSA Performance Data (KT4-C2A)

		-A16	-A25	-A40	-A63	-B10	-B16	-B25	-B40	-B63	-C10	-C16
Maximum short-circuit current												
480V	[kA]	42	42	42	42	42	42	42	18	18	10	5
600V	[kA]	42	42	42	42	42	42	10	5	5	5	5
Motor load												
1-phase												
115V	[HP]	~	~	~	~	~	~	1/10	1/8	1/4	1/2	1
230V	[HP]	~	~	~	~	~	1/10	1/6	1/3	3/4	1 1/2	3
3-phase												
200V	[HP]	~	~	~	~	~	~	1/2	3/4	1 1/2	2	3
230V	[HP]	~	~	~	~	~	~	3/4	1	2	3	5
460V	[HP]	~	~	~	~	1/2	1	1 1/2	3	5	7 1/2	10
575V	[HP]	~	~	~	~	3/4	1	2	3	5	10	15

Auxiliary Contact & Trip Indicator Contact Development ❶

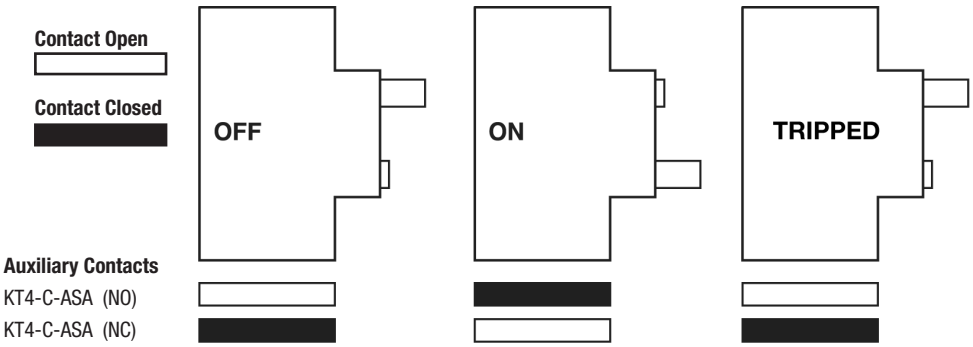

❶ KT4 leaves the factory in the Auto Reset mode. This means the Off and Trip positions are the same. If a true trip position is required, consult your Sprecher + Schuh representative.

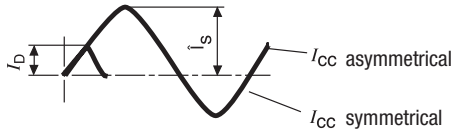

The KT4-C2A manual motor starter limits short-circuit current I_{cc} (prospective short-circuit current). I_D is the maximum cut-off current (highest instantaneous value of the limited short-circuit current). This value is indicated in the following diagram as a function of the system short-circuit current.

Correspondingly the maximum forward j^2 dt energy is limited. This value is indicated in the following diagram as a function of the system short-circuited current.

KT4-C2A
Max. Let-Through (cut-off) Current, U_e = 400...415V

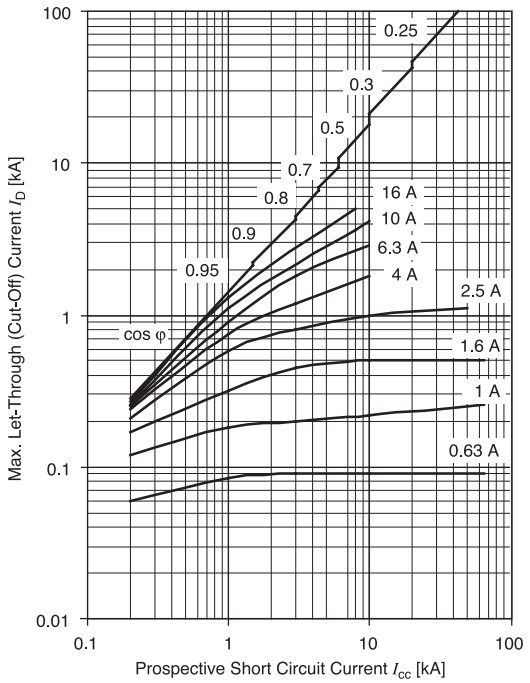

KT4-C2A
Max. Let-Through Energy, U_e = 400...415V

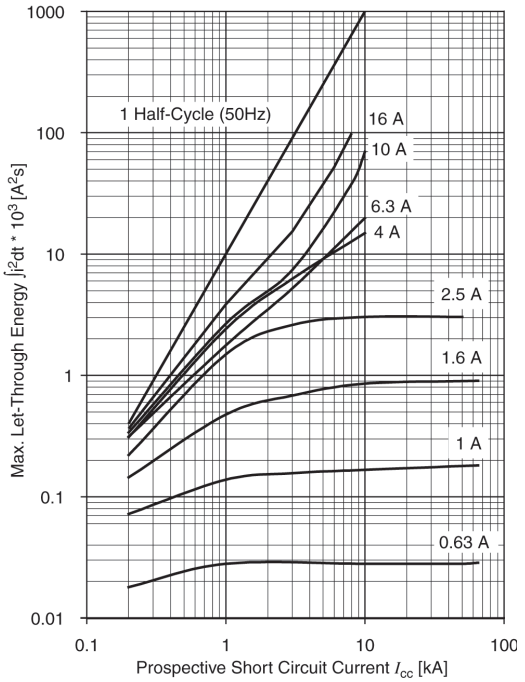

KT4-C2A
Time / current characteristics

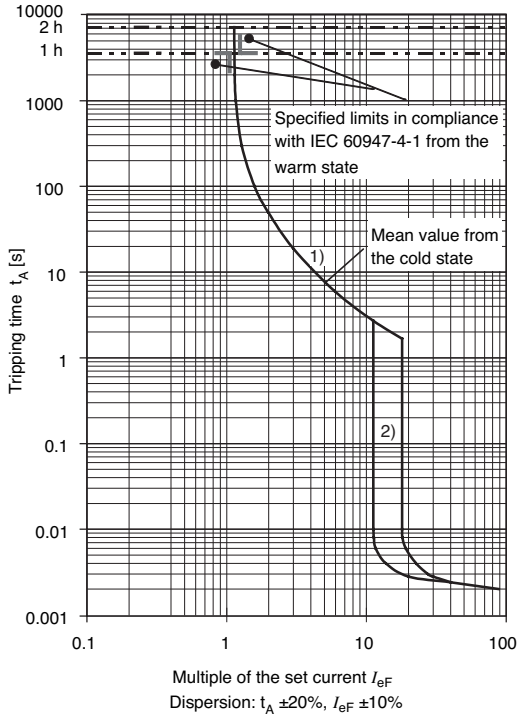

1) Operating Current of Thermal Releases:
The adjustable inverse bimetal trip reliability protects motors against overloads. The curve shows the mean operating current at an ambient temperature of 20°C starting from cold.

In equipment at operating temperature, release time is less than or equal to release time from the cold state.

2) Operating Current of Magnetic Releases:
Electromagnetic instantaneous releases react at a fixed tripping current.

At the upper thermal release setting, this tripping current is 11 times the set cur rent.

Current To Be Set:
Thermal releases meet the requirements for a thermal release of a starter in accordance with IEC 60947-4-1 f. If a different value is specified (such as reduced I_e in motors with an ambient temperature higher than 40°C or a site altitude >2000 m above sea level), the rated operating current I_e must be adjusted.

Single, Two and Three Phase Connection Diagram

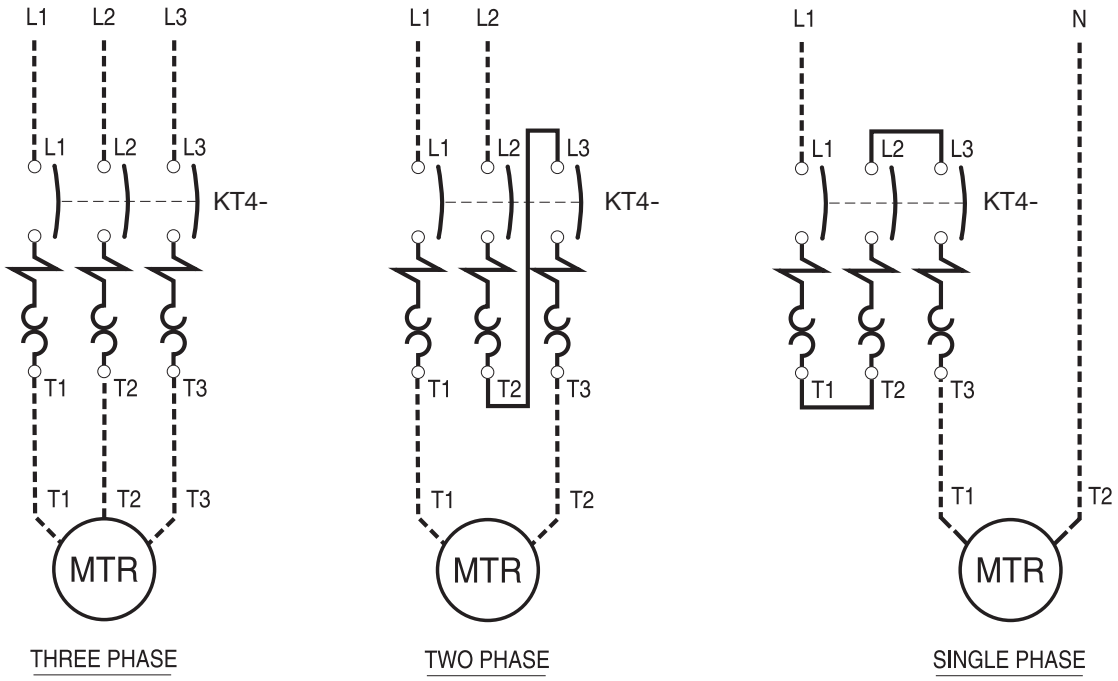

Dimensions are in millimeters (except where noted). Dimensions not intended for manufacturing purposes.

KT4 Motor Circuit Controller

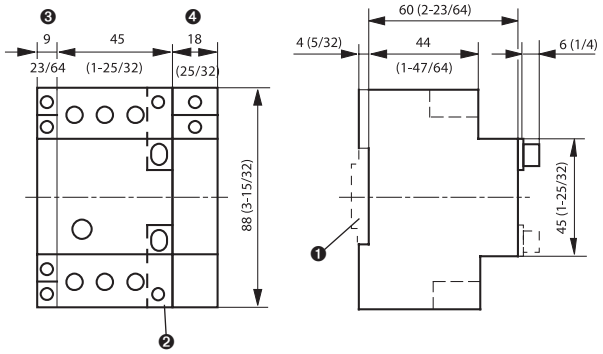

KT4 with Compact Bus Bar

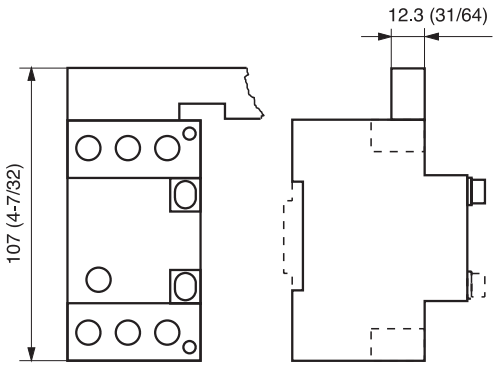

❶ DIN rail (EN 50022-35)
❷ KT4 w/KT4-C-AEA (no dimension change)
❸ KT4-C-ASA
❹ KT4-C-SXB or KT4-C-UXA

KT4-C-WT

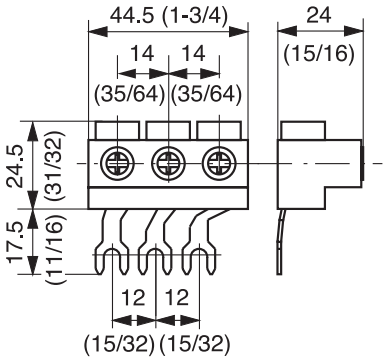

KT4-C2A with KT4-C-WT

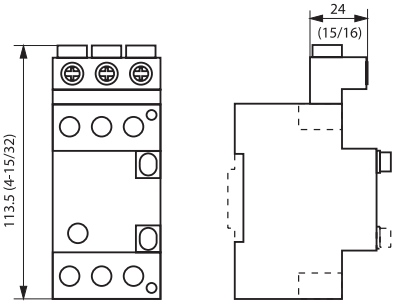

KT4-C-N12

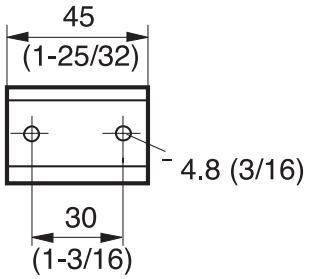

KT4-C-EA55 Enclosure

Dimensions are in millimeters (except where noted). Dimensions not intended for manufacturing purposes.

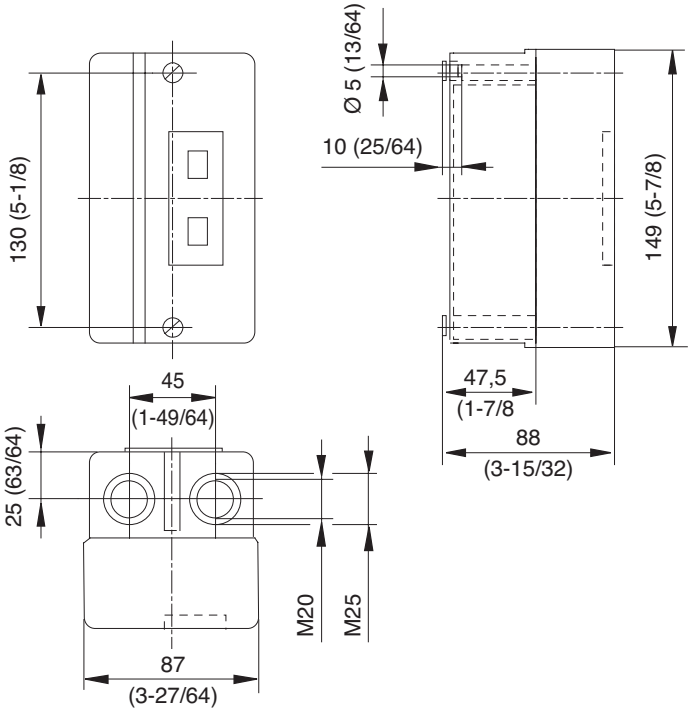

KT4-C-EE41 Enclosure

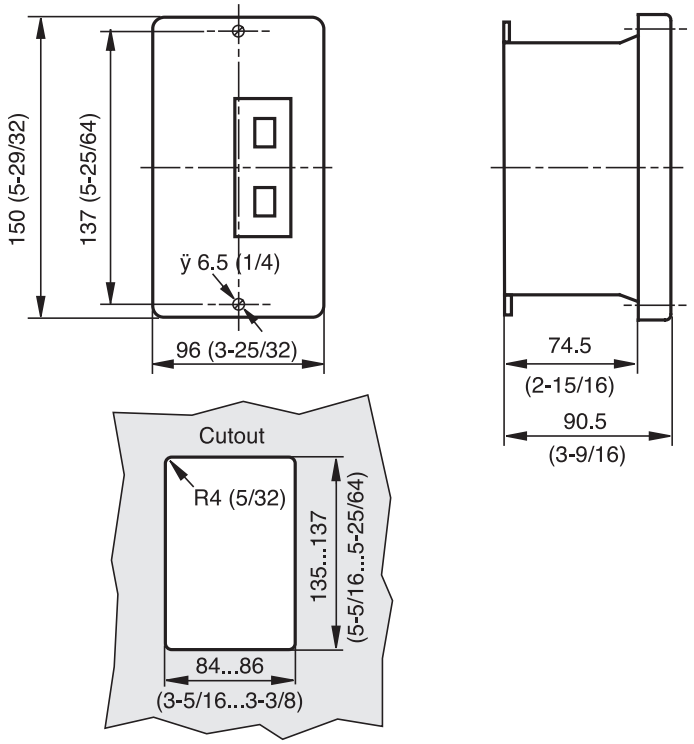

Notes